RANCHO LAGUNA

LANDSCAPE IMPROVEMENT PLANS

VICINITY MAP

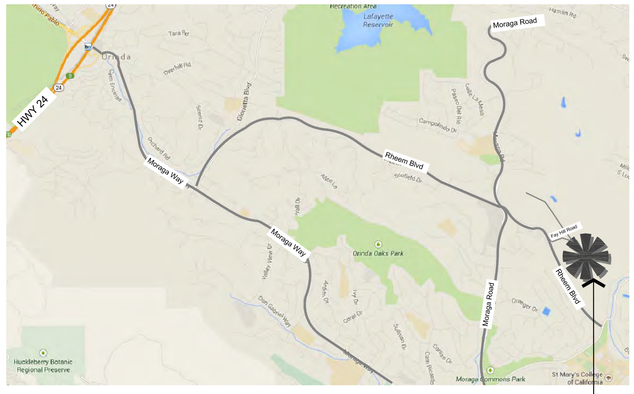

SITE LOCATION

SITE MAP

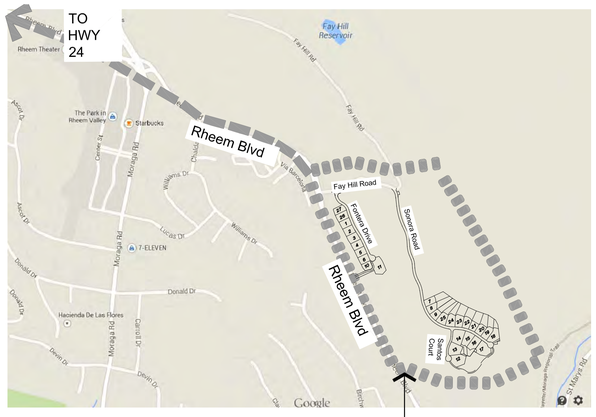

SITE LOCATION

SHEET INDEX

SHEET NUMBER	SHEET TITLE
-	COVER SHEET
L1.0 - L1.9	CALLOUT & LAYOUT PLANS
L2.0 - L2.3	LANDSCAPE DETAILS
L3.0 - L3.10	PLANTING PLANS & LEGEND
L4.0 - L4.11	IRRIGATION PLANS & LEGEND
L4.12 - L4.15	IRRIGATION DETAILS & SPECIFICATIONS
L5.0 - L5.1	LANDSCAPE NOTES & SPECIFICATIONS

REVISION LOG

CLIENT:
SUMMERHILL HOMES
777 SOUTH CALIFORNIA AVE.
PALO ALTO
CA
94304
TEL 650.842.2421

USA
CALL BEFORE YOU DIG
800.227.2600

LICENSED LANDSCAPE ARCHITECT
JEFF R. ABED
Lic. No. 3402
Expires
STATE OF CALIFORNIA

VAN DORN ABED
LANDSCAPE ARCHITECTS, INC.
81 14TH ST. SAN FRANCISCO, CA
ZIP 94103 PH (415) 864-1921 FAX(415) 864-6796

COPYRIGHT © 2006 VAN DORN ABED LANDSCAPE ARCHITECTS, INC.
ALL DRAWINGS & WRITTEN MATERIAL APPEARING HEREIN CONSTITUTE ORIGINAL WORK OF THE ARCHITECT & SAME MAY NOT BE DUPLICATED, USED OR DISCLOSED WITHOUT WRITTEN CONSENT OF THE LANDSCAPE ARCHITECT.

PROJECT MANAGER: MW
DRAWN BY: WM
CHECKED BY: ZA

PROJECT NAME/LOCATION:
RANCHO LAGUNA
MORAGA CA.

DRAWING TITLE:
LANDSCAPE CONSTRUCTION DRAWINGS

REVISIONS:

NO.	DESCRIPTION:	BY:	DATE:

SHEET TITLE:
COVER SHEET

SCALE: N/A
ISSUE DATE: 02/27/15
PROJECT NO.: V1226
SHEET NO.: —

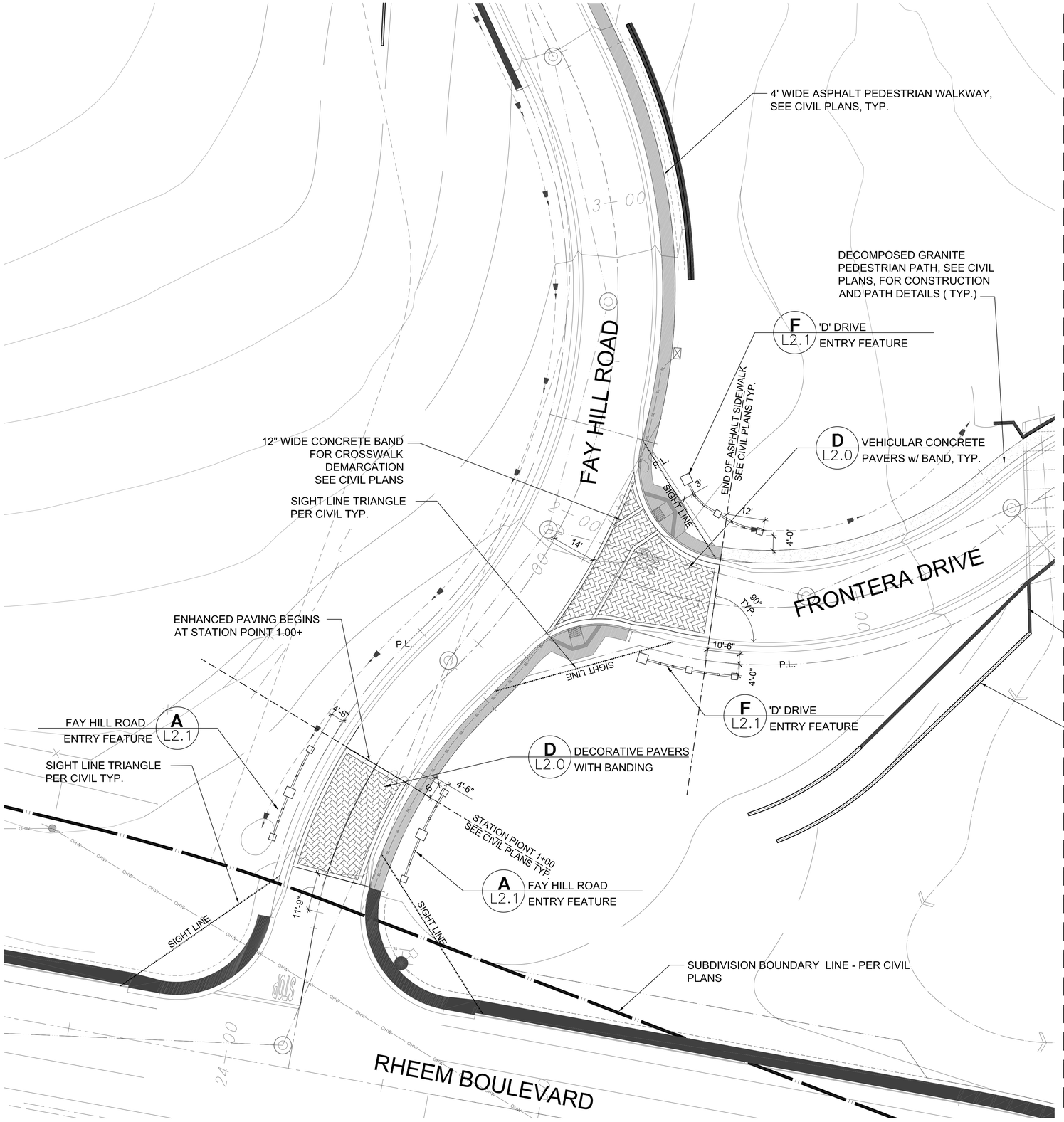

LEGEND

- WOOD FENCE w/ LATTICE
- SOLID GOOD NEIGHBOR FENCE
- OPEN WIRE FENCE
- ALIGN - (ALIGN WITH ARCH WALL/COLUMN EDGE OF PAVING ETC.)
- C.L. CENTERLINE - DOOR / ENTRY ETC.
- STEP RISER TYP.
- P.L. PROPERTY LINE
- E.Q. EQUAL - DIMENSIONED ITEMS TO BE EQUIDISTANT
- B.C.R. BEGINNING OF CIRCLE RADIUS TYP.
- GN GOOD NEIGHBOR FENCE
- R RADIUS
- TYP. TYPICAL
- TYPE 1 RETAINING WALL -SEE CIVIL PLANS
- TYPE 2 RETAINING WALL SEE CIVIL PLANS

0 8 16 32 64

CLIENT:
SUMMERHILL HOMES
777 SOUTH CALIFORNIA AVE.
PALO ALTO
CA
94304
TEL 650.842.2421

CITY UTILITIES PHONE DATA
CALL BEFORE YOU DIG
U S A
P.O.&E. CABLE TV
800.227.2600

LICENSED LANDSCAPE ARCHITECT
ZEKI R. ABED
Lic. No. 3402
Expires
STATE OF CALIFORNIA

VAN DORN ABED
LANDSCAPE ARCHITECTS, INC.
81 14TH ST. SAN FRANCISCO, CA
ZIP 94103 PH (415) 864-1921 FAX(415) 864-4796

COPYRIGHT © 2005 VAN DORN ABED LANDSCAPE ARCHITECTS, INC.
ALL DRAWINGS & WRITTEN MATERIAL APPEARING HEREIN CONSTITUTE THE ORIGINAL & UNPUBLISHED WORK OF THE LANDSCAPE ARCHITECT & SAME MAY NOT BE DUPLICATED, USED, OR DISCLOSED WITHOUT THE WRITTEN CONSENT OF THE LANDSCAPE ARCHITECT.

PROJECT MANAGER: MW
DRAFTED BY:
CHECKED BY:

PROJECT NAME/LOCATION:
RANCHO LAGUNA
MORAGA CA.

DRAWING TITLE:
LANDSCAPE CONSTRUCTION DRAWINGS

REVISIONS:

NO.	DESCRIPTION	BY:	DATE

SHEET TITLE:
CALLOUT & LAYOUT PLAN

SCALE: 1/16" = 1'-0"
ISSUE DATE: 02/27/15
PROJECT NO.: V1226
SHEET NO.: L1.0

MATCHLINE L1.0

MATCHLINE L1.2

FRONTERA DRIVE

TYPE 1 RETAINING WALLS OVER 4'-SEE CIVIL PLANS TYP.

A L2.0 CONCRETE PAVING AT WALKWAYS, TYP.

C L2.0 CONCRETE STEPS TYP.

B L2.0 CONCRETE PAVING IN DRIVEWAYS, TYP.

D L2.2 POST MOUNTED MAILBOXES, TYP.

DRIVEWAY WIDTH AND LAYOUT - PER CIVIL PLANS TYP.

ARCHITECTURAL WING WALL/GATE LENGTH - TO BE FIELD ADJUSTED TO FALL ON P.L. TYP.

DECOMPOSED GRANITE PEDESTRIAN PATH, PER CIVIL PLANS, TYP.

A L2.2 GOOD NEIGHBOR WOOD FENCE w/ LATTICE, TYP.

RETAINING WALL, PER CIVIL PLANS, TYP. NOT ALL WALLS ARE ON PROPERTY LINE TYPICAL- WALL LAYOUT AND DETAIL PER CIVIL

FENCE ALIGNMENT w/ ARCHITECTURAL GATE/COLUMN, TYP.

TYPE 1 RETAINING WALLS OVER 4' AND DECOMPOSED GRANITE PEDESTRIAN PATH SEE CIVIL PLANS TYP.

STATION POINTS TYP.- PER CIVIL PLANS

LOW ARCHITECTURAL WALL TYP. SEE ARCH PLANS FOR TYPE AND FINISH

DRIVEWAY WIDTHS AND ALIGNMENT PER CIVIL PLANS, TYP.

F L2.3 CONCRETE STEP PADS, TYP.

A L2.2 GOOD NEIGHBOR WOOD FENCE w/ LATTICE, TYP.

ALL REARYARD FENCING RUNS ALONG PROPERTY LINE AT TOP OF GRADED PAD, SEE CIVIL PLANS,TYP.

ALL SIDEYARD FENCING FALLS ON PROPERTYLINE -TYP.

TYPE 2- RETAINING WALL UNDER 4' -SEE CIVIL PLANS TYP.

27 P=767.2 PLAN 2C

26 P=762.5 PLAN 3B

1 P=760.0 PLAN 1A ALT

2 P=755.5 PLAN 2B

3 P=749.5 PLAN 3A

NOTE:
SEE LEGEND SHEET L1.0

0 8 16 32 64

CLIENT:
SUMMERHILL HOMES
777 SOUTH CALIFORNIA AVE.
PALO ALTO
CA
94304
TEL 650.842.2421

USA 811 CALL BEFORE YOU DIG
800.227.2600

LICENSED LANDSCAPE ARCHITECT
JERI R. ABED
Lic. No. 3402
Expires
STATE OF CALIFORNIA

VAN DORN ABED
LANDSCAPE ARCHITECTS, INC.
81 14TH ST. SAN FRANCISCO, CA
ZIP 94103 PH (415) 864-1921 FAX(415) 864-6796

COPYRIGHT © 2015 VAN DORN ABED LANDSCAPE ARCHITECTS, INC.
ALL DRAWINGS & WRITTEN MATERIAL APPEARING HEREIN CONSTITUTE ORIGINAL WORK OF THE ARCHITECT & SAME MAY NOT BE DUPLICATED, USED OR DISCLOSED WITHOUT WRITTEN CONSENT OF THE LANDSCAPE ARCHITECT.

PROJECT MANAGER: MW
DRAFTED BY:
CHECKED BY:

PROJECT NAME/LOCATION:
RANCHO LAGUNA
MORAGA CA.

DRAWING TITLE:
LANDSCAPE CONSTRUCTION DRAWINGS

REVISIONS:

NO.	DESCRIPTION	BY:	DATE

SHEET TITLE:
CALLOUT & LAYOUT PLAN

SCALE: 1/16" = 1'-0"
ISSUE DATE: 02/27/15
PROJECT NO.: V1226
SHEET NO.: L1.1
3 OF 44

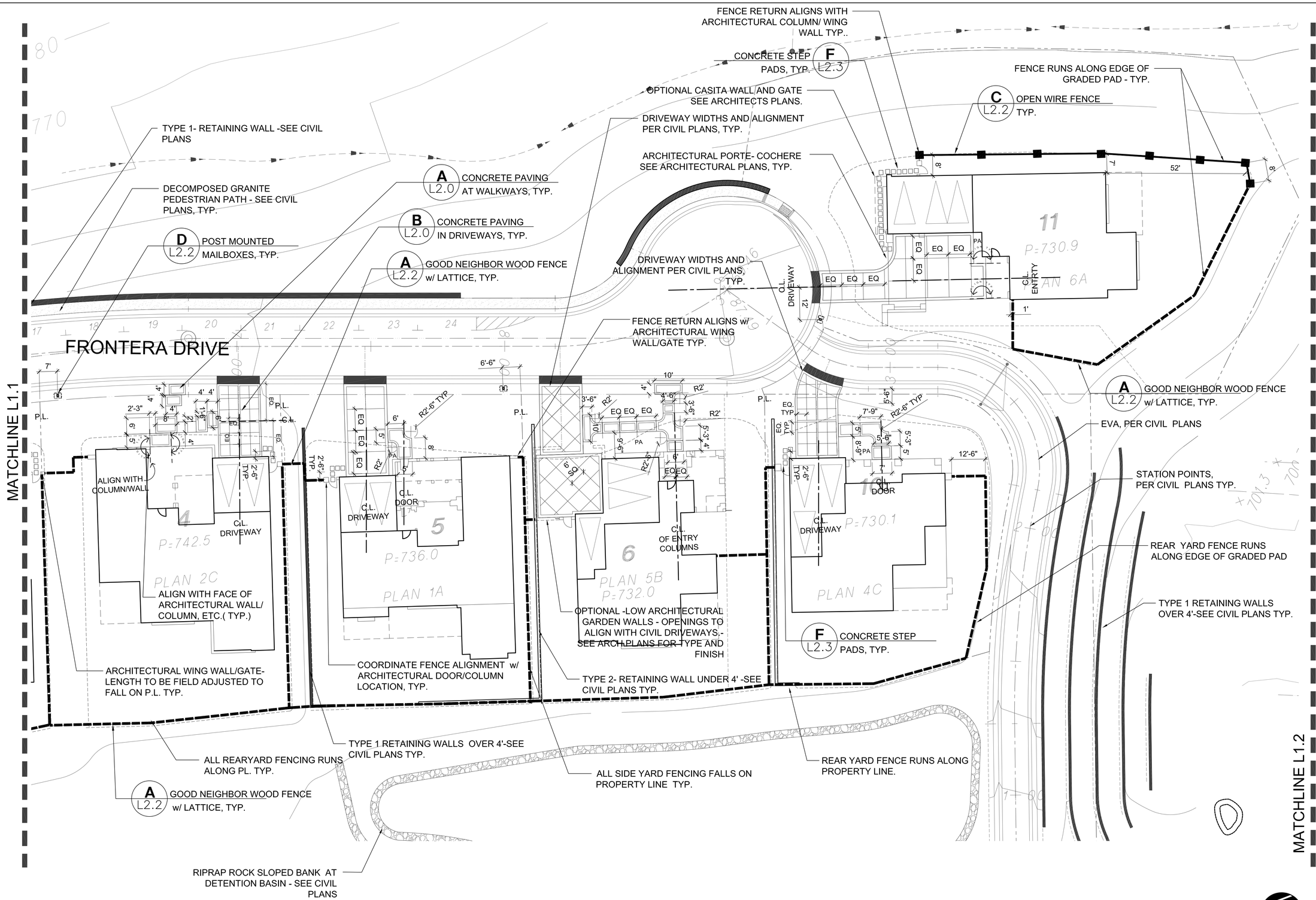

NOTE:
SEE LEGEND SHEET L1.0

0 8 16 32 64

CLIENT:
SUMMERHILL HOMES
777 SOUTH CALIFORNIA AVE.
PALO ALTO
CA
94304
TEL 650.842.2421

CITY UTILITIES PHONE DATA CALL BEFORE YOU DIG P.G.&E. CABLE TV
800.227.2600

LICENSED LANDSCAPE ARCHITECT
ZEKI R. ABED
Lic. No. 3402
Expires
STATE OF CALIFORNIA

VAN DORN ABED
LANDSCAPE ARCHITECTS, INC.
81 14TH ST. SAN FRANCISCO, CA
ZIP 94103 PH (415) 864-1921 FAX(415) 864-4796

COPYRIGHT © 2006 VAN DORN ABED LANDSCAPE ARCHITECTS, INC.
ALL DRAWINGS & WRITTEN MATERIAL APPEARING HEREIN CONSTITUTE THE ORIGINAL & UNPUBLISHED WORK OF THE LANDSCAPE ARCHITECT & SAME MAY NOT BE DUPLICATED, USED OR DISCLOSED WITHOUT THE WRITTEN CONSENT OF THE LANDSCAPE ARCHITECT.

PROJECT MANAGER: MW
DRAFTED BY:
CHECKED BY:

PROJECT NAME/LOCATION:
RANCHO LAGUNA
MORAGA CA.

DRAWING TITLE:
LANDSCAPE CONSTRUCTION DRAWINGS

REVISIONS:

NO.	DESCRIPTION	BY:	DATE

SHEET TITLE:
CALLOUT & LAYOUT PLAN

SCALE: 1/16" = 1'-0"
ISSUE DATE: 02/27/15
PROJECT NO.: V1226
SHEET NO.: L1.2

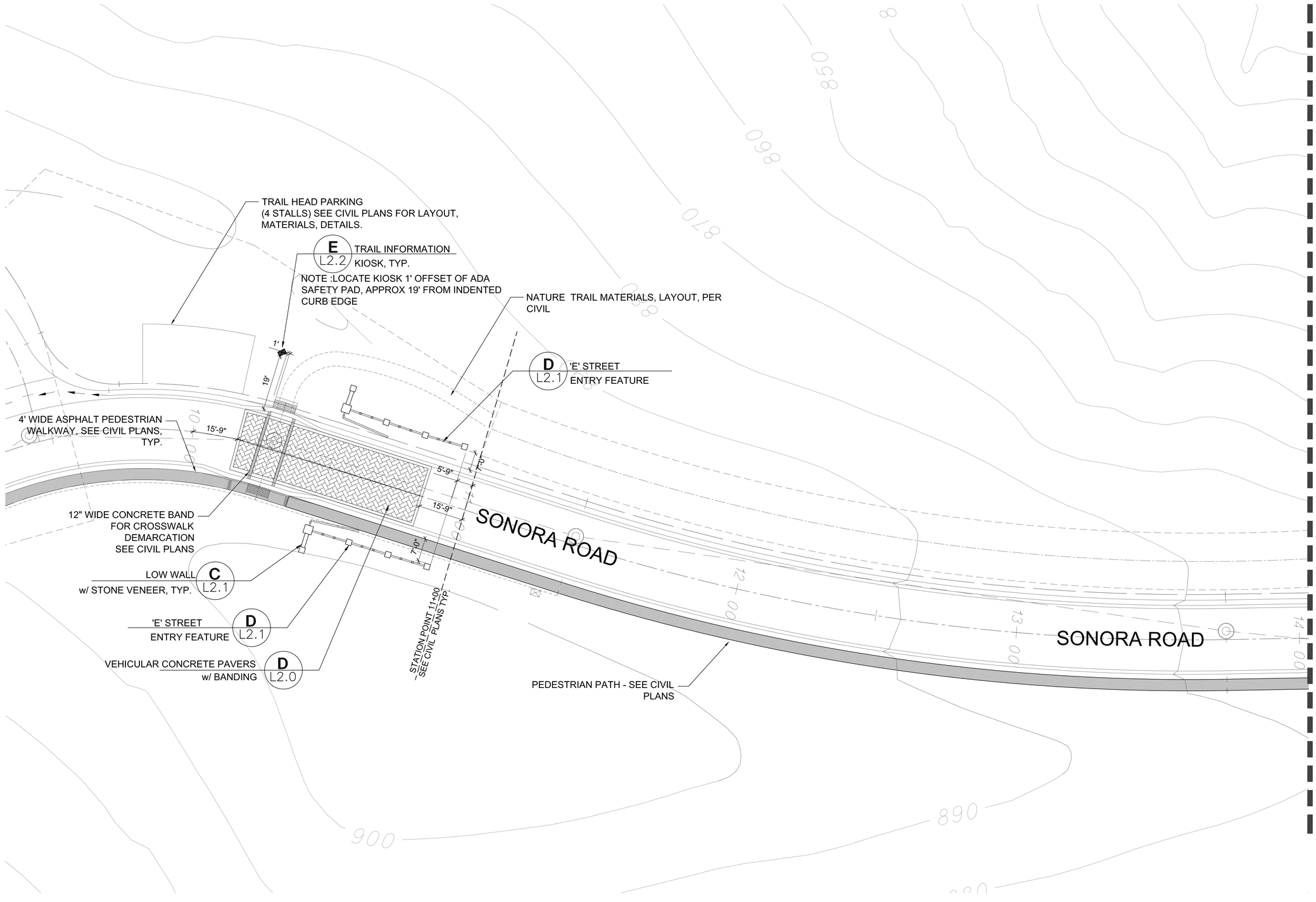

NOTE:
SEE LEGEND SHEET L1.0

0 8 16 32 64

CLIENT:
SUMMERHILL HOMES
777 SOUTH CALIFORNIA AVE.
PALO ALTO
CA
94304
TEL 650.842.2421

USA
800.227.2600

LICENSED LANDSCAPE ARCHITECT
JEFF R. ABED
Lic. No. 3402
Expires
STATE OF CALIFORNIA

VAN DORN ABED
LANDSCAPE ARCHITECTS, INC.
81 14TH ST. SAN FRANCISCO, CA
ZIP 94103 PH (415) 864-1921 FAX(415) 864-6796

PROJECT MANAGER: MW
DRAFTED BY:
CHECKED BY:

COPYRIGHT © 2015 VAN DORN ABED LANDSCAPE ARCHITECTS, INC.
ALL DRAWINGS & WRITTEN MATERIAL APPEARING HEREIN CONSTITUTE ORIGINAL WORK OF THE ARCHITECT & SAME MAY NOT BE DUPLICATED, USED OR DISCLOSED WITHOUT WRITTEN CONSENT OF THE LANDSCAPE ARCHITECT.

PROJECT NAME/LOCATION:
RANCHO LAGUNA
MORAGA CA.

DRAWING TITLE:
LANDSCAPE CONSTRUCTION DRAWINGS

REVISIONS:

NO.	DESCRIPTION	BY:	DATE

SHEET TITLE:
CALLOUT & LAYOUT PLAN

SCALE: 1/16" = 1'-0"
ISSUE DATE: 02/27/15
PROJECT NO.: V1226
SHEET NO.: L1.3
5 or 44

MATCHLINE L1.3

MATCHLINE L1.5

SONORA ROAD

EDGE OF GRADED PAD TYP.

OPEN WIRE FENCE TYP. C L2.2

GN FENCE TERMINATION POINT w/ EDGE OF CIVIL GRADED PAD

SOLID GOOD NEIGHBOR WOOD FENCE B L2.0

ARCHITECTURAL WING WALL/GATE LENGTH - TO BE FIELD ADJUSTED TO FALL ON P.L. TYP.

CONCRETE STEP PADS, TYP. F L2.3

CONCRETE PAVING IN DRIVEWAYS, TYP. B L2.0

CONCRETE STEPS TYP. C L2.0

POST MOUNTED MAILBOXES, TYP. D L2.2

CONCRETE PAVING AT WALKWAYS, TYP. A L2.0

GOOD NEIGHBOR WOOD FENCE w/ LATTICE A L2.0

P.L.

30" MAX TYP. PER MORAGA DESIGN GUIDELINE STANDARDS

34-3"

38"

7

P=777.0

PLAN 4C

C/L DOOR

4'-6"

6'

9'

4'

R2" TYP.

2'-6" TYP.

5'

6'-9"

8'

NOTE:
SEE LEGEND SHEET L1.0

0 8 16 32 64

CLIENT:
SUMMERHILL HOMES
777 SOUTH CALIFORNIA AVE.
PALO ALTO
CA
94304
TEL 650.842.2421

USA 811 CALL BEFORE YOU DIG
800.227.2600

LICENSED LANDSCAPE ARCHITECT
JERI R. ABED
Lic. No. 3402
Expires
STATE OF CALIFORNIA

VAN DORN ABED
LANDSCAPE ARCHITECTS, INC.
81 14TH ST. SAN FRANCISCO, CA
ZIP 94103 PH (415) 864-1921 FAX(415) 864-6796

PROJECT MANAGER: MW
DRAFTED BY:
CHECKED BY:

COPYRIGHT © 2015 VAN DORN ABED LANDSCAPE ARCHITECTS, INC.
ALL DRAWINGS & WRITTEN MATERIAL APPEARING HEREIN CONSTITUTE ORIGINAL WORK OF THE ARCHITECT & SAME MAY NOT BE DUPLICATED, USED OR DISCLOSED WITHOUT WRITTEN CONSENT OF THE LANDSCAPE ARCHITECT.

PROJECT NAME/LOCATION:
RANCHO LAGUNA
MORAGA CA.

DRAWING TITLE:
LANDSCAPE CONSTRUCTION DRAWINGS

REVISIONS:

NO.	DESCRIPTION	BY:	DATE

SHEET TITLE:
CALLOUT & LAYOUT PLAN

SCALE: 1/16" = 1'-0"
ISSUE DATE: 02/27/15
PROJECT NO.: V1226
SHEET NO.: L1.4
6 OF 44

MATCHLINE L1.6

MATCHLINE L1.4

MATCHLINE L1.7

SONORA ROAD

EDGE OF GRADED PAD TYP.

OPEN WIRE FENCE TYP. — C L2.2

SOLID GOOD NEIGHBOR WOOD FENCE — B L2.0

30' MAX TYP FROM EDGE OF PAD PER MORAGA DESIGN GUIDELINE STANDARDS

COORDINATE GN FENCE W/ EDGE OFCIVIL GRADED PAD

FENCE ALIGNS W/ ARCHITECTURAL GATE AND COLUMN, TYP..

FENCE RETURN ALIGNS W/ ARCHITECTURAL GATE/WING WALL TYP.

COORDINATE FENCE TERMINATION POINT W/ END OF RETAINING WALL SEE CIVIL PLANS

GOOD NEIGHBOR FENCE RUNS ALONG TOP OF LOW ARCHITETURAL GARDEN WALL AND TERMINATES AT ARCHITECTURAL GATE AND WALL

SIGHT LINE

SIGHT LINE TRIANGLE PER CIVIL

F L2.3 CONCRETE STEP PADS, TYP.

D L2.2 POST MOUNTED MAILBOXES, TYP.

A L2.0 CONCRETE PAVING AT WALKWAYS, TYP.

C L2.0 CONCRETE STEPS TYP.

B L2.0 CONCRETE PAVING IN DRIVEWAYS, TYP.

RETAINING WALL, PER CIVIL PLANS, TYP.

A L2.2 GOOD NEIGHBOR WOOD FENCE w/ LATTICE, TYP.

LOW ARCHITECTURAL WALL - SEE ARCH PLANS FOR LAYOUT,TYPE AND FINISH

COORDINATE FENCE TERMINATION POINT w/ ARCHITECTURAL DOOR/COLUMN LOCATION, TYP.

DRIVEWAY WIDTHS AND ALIGNMENT PER CIVIL PLANS, TYP.

STEP RISER TYP. CONTRACTOR TO FIELD ADJUST QUANTITY TO MEET GRADES -SEE DETAIL C/L2.0 FOR MAX AND MINS.

NOTE:
SEE LEGEND SHEET L1.0

0 8 16 32 64

CLIENT:
SUMMERHILL HOMES
777 SOUTH CALIFORNIA AVE.
PALO ALTO
CA
94304
TEL 650.842.2421

CALL BEFORE YOU DIG
800.227.2600

LICENSED LANDSCAPE ARCHITECT
JERI R. ABED
Lic. No. 3402
Expires
STATE OF CALIFORNIA

VAN DORN ABED
LANDSCAPE ARCHITECTS, INC.
81 14TH ST. SAN FRANCISCO, CA
ZIP 94103 PH (415) 864-9921 FAX(415) 864-6796

PROJECT MANAGER: MW
DRAFTED BY:
CHECKED BY:

COPYRIGHT © 2006 VAN DORN ABED LANDSCAPE ARCHITECTS, INC.
ALL DRAWINGS & WRITTEN MATERIAL APPEARING HEREIN CONSTITUTE ORIGINAL WORK OF THE ARCHITECT & SAME MAY NOT BE DUPLICATED, USED OR DISCLOSED WITHOUT WRITTEN CONSENT OF THE LANDSCAPE ARCHITECT.

PROJECT NAME/LOCATION:
RANCHO LAGUNA
MORAGA
DRAWING TITLE:
LANDSCAPE CONSTRUCTION DRAWINGS

REVISIONS:

NO.	DESCRIPTION:	BY:	DATE

SHEET TITLE:
CALLOUT & LAYOUT PLAN

SCALE: 1/16" = 1'-0"
ISSUE DATE: 02/27/15
PROJECT NO.: V1226
SHEET NO.: L1.5
7 OF 44

MATCHLINE L1.8

MATCHLINE L1.9

MATCHLINE L1.5

SONORA ROAD

LOS SANTOS C

LOW ARCHITECTURAL GARDEN WALL - SEE ARCH PLANS FOR TYPE AND FINISH

TYPE1- RETAINING WALL OVER 4' -SEE CIVIL PLANS TYP.

TYPE 2- RETAINING WALL UNDER 4' -SEE CIVIL PLANS TYP.

OPTIONAL CASITA WALL PER ARCHITECT FIELD ADJUST CONC. STEP PADS AS NEEDED, TYP.

COORDINATE GN FENCE TERMINATION POINT W/ CIVIL RETAINING WALL

ARCHITECTURAL PORTE-COCHERE TYP. SEE ARCH PLANS

TYPE 2- RETAINING WALL UNDER 4' -SEE CIVIL PLANS TYP.

ARCHITECTURAL PORTE-COCHERE TYP. - SEE ARCH PLANS

OPTIONAL -LOW ARCHITECTURAL GARDEN WALLS TO ALIGN WITH CIVIL DRIVEWAYS. - SEE ARCH PLANS FOR TYPE AND FINISH

OPEN WIRE FENCE TYP. C L2.2

COORDINATE FENCE TERMINATION POINT W/ CIVIL GRADED PAD

LOW GARDEN WALL PER ARCH TYP. - SEE ARCH PLANS

FENCE RETURN ALIGNS WITH ARCHITECTURAL WING WALL/GATE TYP.

SOLID GOOD NEIGHBOR WOOD FENCE B L2.0

GOOD NEIGHBOR WOOD FENCE w/ LATTICE A L2.0

CONCRETE PAVING IN DRIVEWAYS, TYP. B L2.0

C L2.0 CONCRETE STEPS TYP.

DRIVEWAY WIDTH AND ALIGNMENT PER CIVIL PLANS, TYP.

F L2.3 CONCRETE STEP PADS, TYP.

OPTIONAL CASITA WALL PER ARCHITECT FIELD ADJUST CONC. STEP PADS AS NEEDED, TYP.

A L2.0 CONCRETE PAVING AT WALKWAYS, TYP.

30' MAX TYP FROM EDGE OF PAD PER MORAGA DESIGN GUIDELINE STANDARDS

P.L.

CL DRIVEWAY

CL DOOR

SIGHT LINE

PLAN 4

PLAN 6C

PLAN 5A

PLAN 3B

PLAN 5

21

22

23

24

25

15

14

P=743.0

P=751.0

P=761.0

P=723.0

P=734.5

NOTE:
SEE LEGEND SHEET L1.0

0 8 16 32 64

CLIENT:
SUMMERHILL HOMES
777 SOUTH CALIFORNIA AVE.
PALO ALTO
CA
94304
TEL 650.842.2421

CALL BEFORE YOU DIG
800.227.2600

LICENSED LANDSCAPE ARCHITECT
JERI R. ABED
Lic. No. 3402
Expires
STATE OF CALIFORNIA

VAN DORN ABED
LANDSCAPE ARCHITECTS, INC.
81 14TH ST. SAN FRANCISCO, CA
ZIP 94103 PH (415) 864-1921 FAX(415) 864-6796

PROJECT MANAGER: MW
DRAWN BY:
CHECKED BY:

COPYRIGHT © 2015 VAN DORN ABED LANDSCAPE ARCHITECTS, INC.
ALL DRAWINGS & WRITTEN MATERIAL APPEARING HEREIN CONSTITUTE ORIGINAL WORK OF THE ARCHITECT & SHALL NOT BE DUPLICATED, USED OR DISCLOSED WITHOUT WRITTEN CONSENT OF THE LANDSCAPE ARCHITECT.

PROJECT NAME/LOCATION:
RANCHO LAGUNA
MORAGA CA.

DRAWING TITLE:
LANDSCAPE CONSTRUCTION DRAWINGS

REVISIONS:

NO.	DESCRIPTION	BY:	DATE

SHEET TITLE:
CALLOUT & LAYOUT PLAN

SCALE: 1/16" = 1'-0"
ISSUE DATE: 02/27/15
PROJECT NO.: V1226
SHEET NO.: L1.6
8 OF 44

MATCHLINE L1.9

MATCHLINE L1.5

SONORA ROAD

LOS SANTOS COURT

ARCHITECTURAL PORTE-COCHERE TYP.

TYPE 1- RETAINING WALL OVER 4' SEE CIVIL PLANS TYP.

ALL FENCING RUNS ALONG PROPERTY LINE TYP.

OPTIONAL CASITA WALL PER ARCHITECT, FIELD ADJUST CONC. STEP PAD AS NEEDED TYP.

F L2.3 CONCRETE STEP PADS, TYP.

FENCE ALIGNS w/ ARCHITECTURAL GATE AND COLUMN, TYP..

ALL FENCING RUNS ALONG EDGE OF GRADED PAD

C L2.2 OPEN WIRE FENCE TYP.

B L2.0 SOLID GOOD NEIGHBOR WOOD FENCE

ALL FENCING RUNS ALONG PROPERTY LINE

GOOD NEIGHBOR WOOD FENCE w/ LATTICE — A L2.0

CONCRETE PAVING IN DRIVEWAYS, TYP. — B L2.0

BEGIN TRANSITION @ TOP OF PAD

BEGIN TRANSITION @ TOP OF PAD

STEP RISER TYP. CONTRACTOR TO FIELD ADJUST QUANTITY TO MEET GRADES SEE DETAIL C/L2.0 FOR MAX AND MINS.

CONCRETE PAVING AT WALKWAYS, TYP. — A L2.0

POST MOUNTED MAILBOXES, TYP. — D L2.2

ALIGN FENCE WITH ARCHITECTURAL DOOR/COLUMN LOCATION, TYP.

EVA PER CIVIL PLANS

NOTE:
SEE LEGEND SHEET L1.0

0 8 16 32 64

CLIENT:
SUMMERHILL HOMES
777 SOUTH CALIFORNIA AVE.
PALO ALTO
CA
94304
TEL 650.842.2421

CALL BEFORE YOU DIG
800.227.2600

LICENSED LANDSCAPE ARCHITECT
JERI R. ABED
Lic. No. 3402
Expires
STATE OF CALIFORNIA

VAN DORN ABED
LANDSCAPE ARCHITECTS, INC.
81 14TH ST. SAN FRANCISCO, CA ZIP 94103 PH (415) 864-1921 FAX(415) 864-6796

COPYRIGHT © 2006 VAN DORN ABED LANDSCAPE ARCHITECTS, INC.
ALL DRAWINGS & WRITTEN MATERIAL APPEARING HEREIN CONSTITUTE ORIGINAL WORK OF THE ARCHITECT & SAME MAY NOT BE DUPLICATED, USED OR DISCLOSED WITHOUT WRITTEN CONSENT OF THE LANDSCAPE ARCHITECT.

PROJECT MANAGER: MW
DRAFTED BY:
CHECKED BY:

PROJECT NAME/LOCATION:
RANCHO LAGUNA
MORAGA
DRAWING TITLE:
LANDSCAPE CONSTRUCTION DRAWINGS

REVISIONS: NO. | DESCRIPTION | BY: | DATE:

SHEET TITLE:
CALLOUT & LAYOUT PLAN

SCALE: 1/16" = 1'-0"
ISSUE DATE: 02/27/15
PROJECT NO.: V1226
SHEET NO.: L1.7

P.L.
38'±
135'±
30' MAX. TYP. FROM EDGE OF PAD PER MORAGA DESIGN GUIDELINE STANDARDS
GN FENCE TERMINATION POINT WITH EDGE OF GRADED PAD
28'±
OPEN WIRE FENCE TYP. C L2.2
B L2.0 SOLID GOOD NEIGHBOR WOOD FENCE
TYPE 2 RETAINING WALL UNDER 4'- SEE CIVIL PLANS TYP..
A L2.0 GOOD NEIGHBOR WOOD FENCE w/ LATTICE
CONCRETE STEP PADS, TYP. F L2.3
COORDINATE FENCE TERMINATION POINT w/ ARCHITECTURAL DOOR/COLUMN LOCATION, TYP.
C L2.0 CONCRETE STEPS TYP.
B L2.0 CONCRETE PAVING IN DRIVEWAYS, TYP.
OPTIONAL CASITA WALL PER ARCHITECT, FIELD ADJUST CONC. STEP PADS AS NEEDED, TYP.
STATION POINTS - PER CIVIL PLANS TYP.
A L2.0 CONCRETE PAVING AT WALKWAYS, TYP.
60'±
78'±
80'±
TYPE 2- RETAINING WALL UNDER 4' -SEE CIVIL PLANS TYP.
TYPE 1 RETAINING WALLS OVER 4'-SEE CIVIL PLANS TYP.
DRIVEWAY WIDTHS AND ALIGNMENT PER CIVIL PLANS, TYP.
OPTIONAL CASITA WALL PER ARCHITECT FIELD ADJUST CONC. STEP PAD AS NEEDED, TYP.
ARCHITECTURAL PORTE-COCHERE SEE ARCH PLANS
D L2.2 POST MOUNTED MAILBOXES, TYP.
SONORA ROAD
MATCHLINE L1.6
MATCHLINE L1.9
18 P=702.0 PLAN 4C
19 P=708.0
20 P=716.0 PLAN 5B
21 P=726.0 PLAN 4
22 P=735.0 PLAN 6C
17 P=701.0 PLAN 5A
16 P=710.0 PLAN 6B
660 670 680 690 700 710 720

NOTE:
SEE LEGEND SHEET L1.0

0 8 16 32 64

CLIENT:
SUMMERHILL HOMES
777 SOUTH CALIFORNIA AVE.
PALO ALTO
CA
94304
TEL 650.842.2421

USA CALL BEFORE YOU DIG
800.227.2600

LICENSED LANDSCAPE ARCHITECT
JEKY R. ABED
Lic. No. 3402
Expires
STATE OF CALIFORNIA

VAN DORN ABED
LANDSCAPE ARCHITECTS, INC.
81 14TH ST. SAN FRANCISCO, CA
ZIP 94103 PH (415) 864-1921 FAX(415) 864-0796

PROJECT MANAGER: MW
DRAFTED BY:
CHECKED BY:

COPYRIGHT © 2006 VAN DORN ABED LANDSCAPE ARCHITECTS, INC.
ALL DRAWINGS & WRITTEN MATERIAL APPEARING HEREIN CONSTITUTE ORIGINAL WORK OF THE ARCHITECT & SHALL NOT BE DUPLICATED, USED OR DISCLOSED WITHOUT WRITTEN CONSENT OF THE LANDSCAPE ARCHITECT.

PROJECT NAME/LOCATION:
RANCHO LAGUNA
MORAGA
DRAWING TITLE:
LANDSCAPE CONSTRUCTION DRAWINGS

REVISIONS:

NO.	DESCRIPTION:	BY:	DATE:

SHEET TITLE:
CALLOUT & LAYOUT PLAN

SCALE: 1/16" = 1'-0"
ISSUE DATE: 02/27/15
PROJECT NO.: V1226
SHEET NO.: L1.8
10 OF 44

B L2.0 SOLID GOOD NEIGHBOR WOOD FENCE

MATCHLINE L1.8

MATCHLINE L1.6

MATCHLINE L1.7

16 P=710.0 PLAN 6B

17 PLAN 5A

15 P=723.0 PLAN 5C

13 P=739.0

5 5A

R1'-6" R2' TYP. 5' 10' P.L. 4'-5" 7'-5" 7'-6" 14'-3" 13'-3" 4' 8' 2' TYP. FENCE EQ. EQ. R2'-9" PA R2' 18' 12" MIN. CLR. 34'-9" CL

COORDINATE FENCE TERMINATION POINT w/ ARCHITECTURAL DOOR/COLUMN LOCATION, TYP.

P.L.

C L2.2 OPEN WIRE FENCE TYP.

A L2.0 GOOD NEIGHBOR WOOD FENCE w/ LATTICE

NOTE:
SEE LEGEND SHEET L1.0

0 8 16 32 64

CLIENT:
SUMMERHILL HOMES
777 SOUTH CALIFORNIA AVE.
PALO ALTO
CA
94304
TEL 650.842.2421

CALL BEFORE YOU DIG
800.227.2600

LICENSED LANDSCAPE ARCHITECT
JERI R. ABED
Lic. No. 3402
Expires
STATE OF CALIFORNIA

VAN DORN ABED
LANDSCAPE ARCHITECTS, INC.
81 14TH ST. SAN FRANCISCO, CA
ZIP 94103 PH (415) 864-1921 FAX(415) 864-6796

PROJECT MANAGER: MW
DRAFTED BY:
CHECKED BY:

COPYRIGHT © 2006 VAN DORN ABED LANDSCAPE ARCHITECTS, INC.
ALL DRAWINGS & WRITTEN MATERIAL APPEARING HEREIN CONSTITUTE ORIGINAL WORK OF THE ARCHITECT & SAME MAY NOT BE DUPLICATED, USED OR DISCLOSED WITHOUT WRITTEN CONSENT OF THE LANDSCAPE ARCHITECT.

PROJECT NAME/LOCATION:
RANCHO LAGUNA
MORAGA CA.

DRAWING TITLE:
LANDSCAPE CONSTRUCTION DRAWINGS

REVISIONS:

NO.	DESCRIPTION	BY:	DATE

SHEET TITLE:
CALLOUT & LAYOUT PLAN

SCALE: 1/16" = 1'-0"
ISSUE DATE: 02/27/15
PROJECT NO.: V1226
SHEET NO.: L1.9
11 OF 44

NOTES:
1. CONCRETE FIELD TO BE NATURAL GREY CONCRETE, SELECTED BY OWNER. SUBMIT SAMPLES OF DAVIS COLORS TO OWNER.
2. SCORE PATTERN PER PLAN

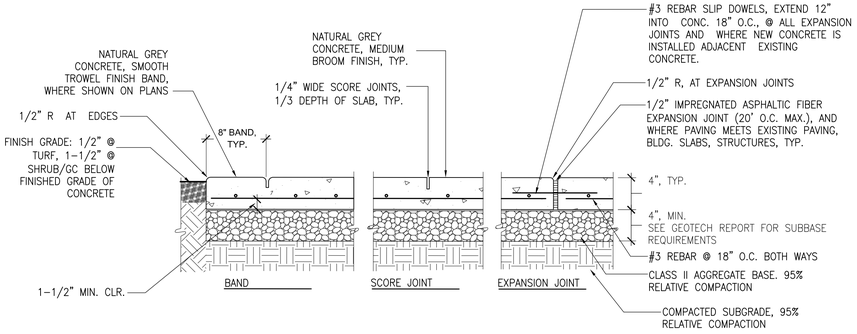

A CONCRETE PAVING - WALKWAYS
1"=1'-0"

NOTES:
1. CONCRETE FIELD TO BE NATURAL GREY CONCRETE, SELECTED BY OWNER. SUBMIT SAMPLES OF DAVIS COLORS TO OWNER.
2. SCORE PATTERN PER PLAN

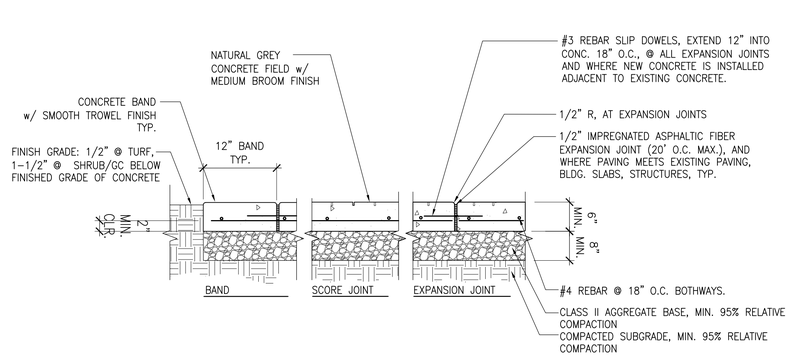

B CONCRETE PAVING - DRIVEWAYS
1"=1'-0"

CONCRETE NOTES:

1. SCORING PATTERN TO MEET ALL ACI INTERNATIONAL GUIDELINES.
2. ALL FORMWORK/SCORING/PROPOSED JOINT SPACING TO BE APPROVED AND REVIEWED BY OWNERS' REPRESENTATIVE PRIOR TO POURING.
3. ALL SCORING/EXPANSION JOINTS TO BE MINIMUM 1/3 DEPTH OF SLAB.
4. DISTANCE BETWEEN EXPANSION JTS TO BE MAXIMUM 24 TIMES SLAB THICKNESS. ALL EXPANSION JTS TO BE CONTINUOUS, NOT STAGGERED OR OFFSET. REFER TO ACI INTL. CCS-1 SERIES GUIDELINES FOR ALL CONCRETE WORK. ANY DISCREPANCIES WITH DRAWINGS TO BE BROUGHT TO ATTENTION OF OWNER/ARCHITECT PRIOR TO COMMENCEMENT OF WORK.
5. CONCRETE PANELS TO BE AS SQUARE AS PRACTICAL. NEVER MAKE LONG SIDE MORE THAN 1-1/2 TIMES LENGTH OF SHORT SIDE. NO ONE PANEL TO BE MORE THAN 100 SQ. FT.
6. INSTALL EXPANSION JOINTS WHERE NEW PAVING MEETS EXISTING PAVING, WALLS, CURBS, FOUNDATIONS, OR OTHER FIXED OBJECTS, AND CHANGES IN WALK DIRECTIONS.
7. CONCRETE COLOR TO BE AS SPECIFIED IN DETAILS.
8. PAVING FIELD TO BE MEDIUM BROOM FINISH, PERPENDICULAR TO PATH OF TRAVEL.
9. CONTRACTOR SHALL COORDINATE INSTALLATION OF REBAR SLIP DOWELS WHERE DRIVEWAY MEETS GARAGE CONCRETE PAD WITH OWNER'S REPRESENTATIVE AND PROJECT STRUCTURAL ENGINEER. DOWELS SHALL BE #4 REBAR SPACED 24' O.C. EXTENDING 12" INTO DRIVEWAY AND GARAGE PAD, OR AS SPECIFIED BY STRUCTURAL ENGINEER. CONTRACTOR SHALL ONLY INSTALL REBAR DOWELS IF APPROVED BY OWNER'S REPRESENTATIVE AND PROJECT STRUCTURAL ENGINEER. SUBMIT TO OWNER'S REPRESENTATIVE PROPOSED DOWEL LOCATIONS.
3. PAVING PROFILE, AGGREGATE, SUBBASE PREPARATION & COMPACTION PER GEOTECH ENGINEER, TYP. PROFILES ARE SHOWN FOR BIDDING PURPOSES ONLY. SEE GEOTECH REPORT FOR PAVING & SUBBASE REQUIREMENTS.

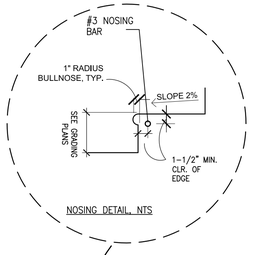

NOSING DETAIL, NTS

NOTES:
1. CONCRETE STAIRS TO HAVE MEDIUM BROOM FINISH.
2. COLOR TO MATCH THE ADJACENT PAVING.
3. SEE PLAN FOR GENERAL STEP LAYOUT. RISER HEIGHT 5 1/2" MIN. TO 7 1/2" MAX. AND EQUAL. SEE CIVIL GRADING PLANS FOR ALL FINISH GRADES.
4. MAXIMUM 3 CONSECUTIVE STEPS AT ANY LOCATION.
5. WHEN 4 RISERS NEEDED, GROUP RISERS IN PAIRS OF 2 (TWO).
6. WHEN 5 RISERS OR MORE RISERS NEEDED GROUP STEPS IN PAIRS OF 2-3.
7. MAXIMUM 2% DIRECTIONAL SLOPE ON LANDING & WALKS IN ANY DIRECTION.

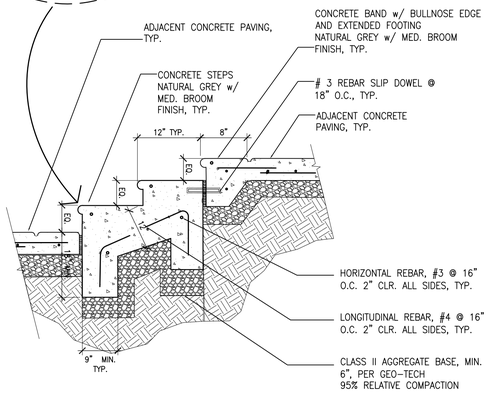

C CONCRETE STEPS
1"=1'-0"

CONCRETE PAVER NOTES:

1. BEDDING COURSE SHALL BE ANGULAR CONCRETE SAND CONFORMING TO ASTM C-33 SPECIFICATIONS.
2. PAVER JOINTS SHALL BE FILLED WITH ANGULAR CONCRETE SAND CONFORMING TO ASTM C-33 SPECIFICATIONS.
3. ALL DRAINAGE PER CIVIL ENGINEER PLANS.
4. INSTALL REBAR DOWEL WHERE CONCRETE BAND MEETS HOUSE FOUNDATION. PRIOR TO INSTALLATION SUBMIT TO OWNERS REPRESENTATIVE PROPOSED DOWEL LOCATIONS AND VERIFY WITH STRUCTURAL ENGINEER ANY CONFLICTS WITH STRUCTURAL SLAB, IF ANY.
5. SUBMIT PAVER SAMPLE AND SPECIFICATIONS TO OWNER FOR APPROVAL PRIOR TO ORDERING.
3. PAVER PROFILE, AGGREGATE, SUBBASE PREPARATION & COMPACTION PER GEOTECH ENGINEER, TYP. PROFILES AND MINIMUMS SHOWN ARE FOR BIDDING PURPOSES ONLY. SEE GEOTECH REPORT FOR PAVING & SUBBASE REQUIREMENTS.

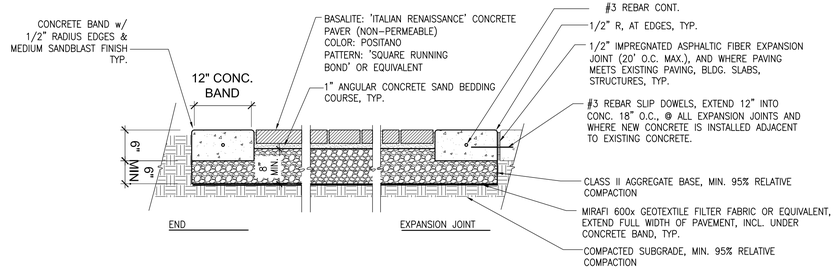

D VEHICULAR CONCRETE PAVERS
1/2"=1'-0"

CLIENT:
SUMMERHILL HOMES
777 SOUTH CALIFORNIA AVE.
PALO ALTO
CA.
94304
TEL 650.842.2421

CALL BEFORE YOU DIG
USA
800.227.2600

LICENSED LANDSCAPE ARCHITECT
PETER R. ABED
Lic. No. 3402
Expires
STATE OF CALIFORNIA

VAN DORN ABED
LANDSCAPE ARCHITECTS, INC.
81 14TH ST. SAN FRANCISCO, CA
ZIP 94103 PH (415) 864-9721 FAX(415) 864-6796

COPYRIGHT © 2009 VAN DORN ABED LANDSCAPE ARCHITECTS, INC.
ALL DRAWINGS & WRITTEN MATERIAL APPEARING HEREIN CONSTITUTE ORIGINAL AND UNPUBLISHED WORK OF THE LANDSCAPE ARCHITECT AND THE SAME MAY NOT BE REPRODUCED, USED, OR DISCLOSED WITHOUT THE WRITTEN CONSENT OF VAN DORN ABED LANDSCAPE ARCHITECTS.

PROJECT MANAGER: MW
DRAFTED BY: MW
CHECKED BY: ZA

PROJECT NAME/LOCATION:
RANCHO LAGUNA
MORAGA CA.

DRAWING TITLE:
LANDSCAPE CONSTRUCTION DRAWINGS

REVISIONS:

NO.	DESCRIPTION	BY:	DATE

SHEET TITLE:
LANDSCAPE DETAILS

SCALE: AS NOTED
ISSUE DATE: 02/27/15
PROJECT NO.: V1226
SHEET NO.: L2.0
12 OF 44

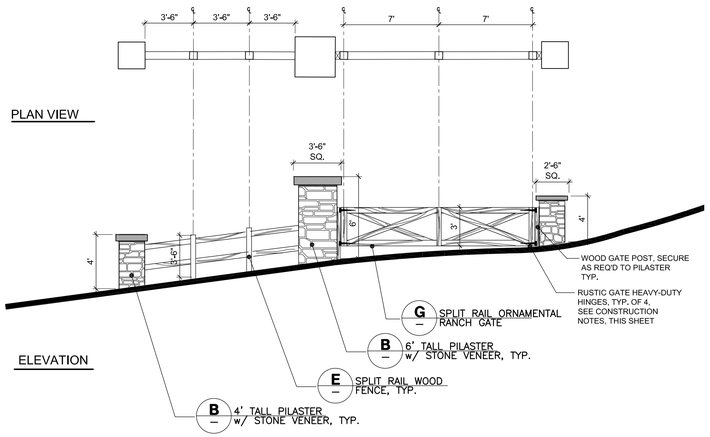

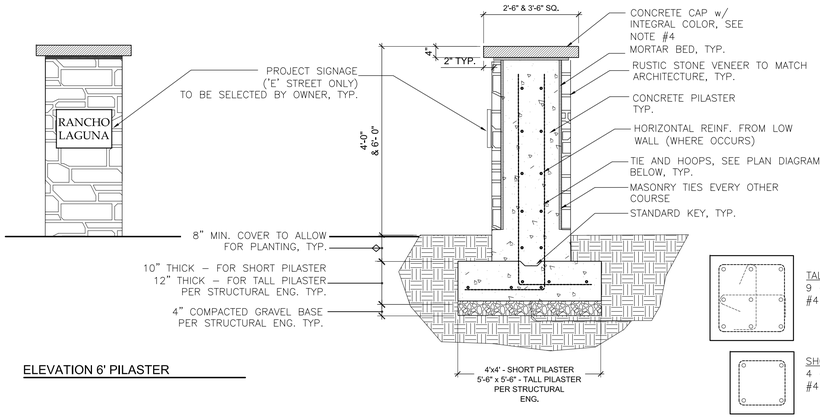

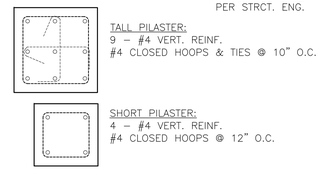

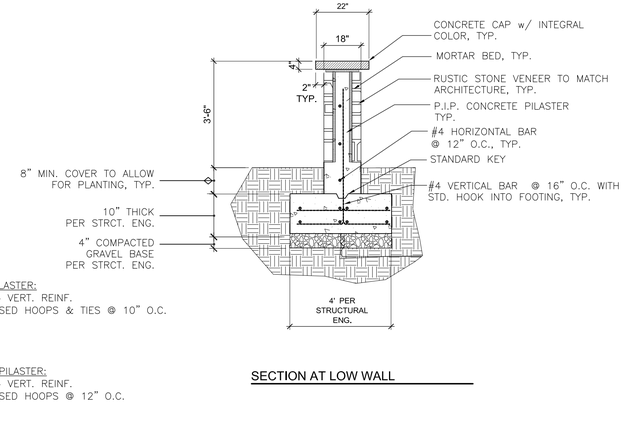

A FAY HILL ROAD ENTRY FEATURE
3/16" = 1'-0"

B P.I.P OR CMU BLOCK PILASTER w/ STONE VENEER
3/8" = 1'-0"

C LOW WALL w/ STONE VENEER
3/8" = 1'-0"

D 'E' STREET ENTRY FEATURE
3/16" = 1'-0"

E SPLIT RAIL WOOD FENCE
3/8" = 1'-0"

CONTRACTOR TO SUBMIT SHOP DRAWINGS, SEE CONSTRUCTION NOTES, THIS SHEET

CONSTRUCTION NOTES:

1. WOOD: TO BE WESTERN RED CEDAR - SPLIT RAIL.
2. RUSTIC GATE HARDWARE:
   HEAVY DUTY OLD FASHIONED HINGES - 14", #8292-14SP, BLACK COATED, GALVANIZED. QTY: 6
   CANE BOLT: STAINLESS STEEL DROP ROD BOLT #NW38305-SS, BLACK COATED. 24" LONG. QTY: 1
   AVAILABLE THROUGH: HOOVER FENCE COMPANY, (800) 355-2335 www.hooverfence.com OR APPROVED EQUIVALENT.
   ALL GATES TO BE FIXED/NON-OPERATIONAL.
3. STONE VENEER: TO MATCH ARCHITECTURE. SUBMIT CUT SHEETS TO OWNER FOR APPROVAL.
4. PILASTERS AND WALL CAPS: TO BE CONCRETE w/ INTEGRAL COLOR AND SACK FINISH. COLOR TO BE "LIGHT GRAY" BY DAVIS COLORS. SUBMIT SAMPLE TO OWNER FOR APPROVAL.
5. CONTRACTOR TO PROVIDE SHOP DRAWINGS TO OWNER FOR APPROVAL.

F 'D' DRIVE ENTRY FEATURE
3/16" = 1'-0"

G SPLIT RAIL ORNAMENTAL/FIXED RANCH GATE
3/8" = 1'-0"

CLIENT:
SUMMERHILL HOMES
777 SOUTH CALIFORNIA AVE.
PALO ALTO
CA.
94304
TEL 650.842.2421

CALL BEFORE YOU DIG
800.227.2600

LICENSED LANDSCAPE ARCHITECT
ZEKE R. ABED
Lic. No. 3402
Expires
STATE OF CALIFORNIA

VAN DORN ABED
LANDSCAPE ARCHITECTS, INC.
81 14TH ST. SAN FRANCISCO, CA
ZIP 94103 PH (415) 864-1921 FAX(415) 864-6796

COPYRIGHT © 2009 VAN DORN ABED LANDSCAPE ARCHITECTS, INC.
ALL DRAWINGS & WRITTEN MATERIAL APPEARING HEREIN CONSTITUTE ORIGINAL AND UNPUBLISHED WORK OF THE LANDSCAPE ARCHITECT AND THE SAME MAY NOT BE REPRODUCED, USED, OR DISCLOSED WITHOUT THE WRITTEN CONSENT OF THE LANDSCAPE ARCHITECT.

PROJECT MANAGER: MW
DRAFTED BY: MW
CHECKED BY: ZA

PROJECT NAME/LOCATION:
RANCHO LAGUNA
MORAGA CA.

DRAWING TITLE:
LANDSCAPE CONSTRUCTION DRAWINGS

REVISIONS:

NO.	DESCRIPTION	BY:	DATE

SHEET TITLE:
LANDSCAPE DETAILS

SCALE: AS NOTED
ISSUE DATE: 02/27/15
PROJECT NO.: V1226
SHEET NO.: L2.1
13 OF 44

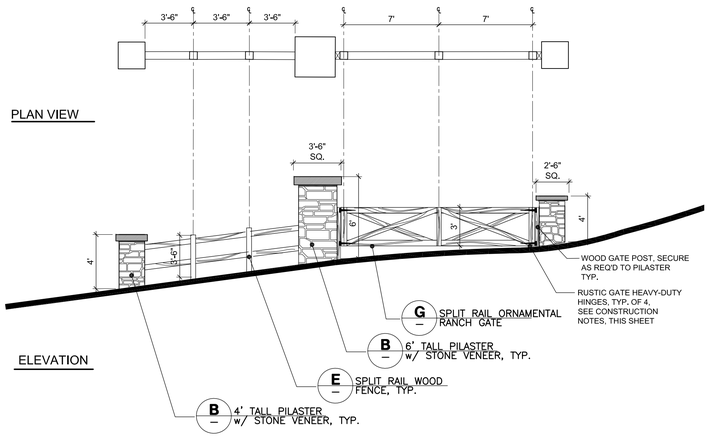

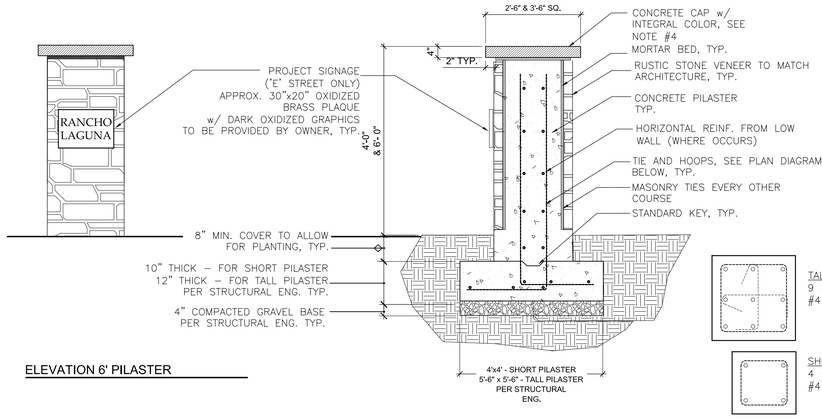

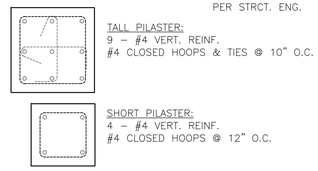

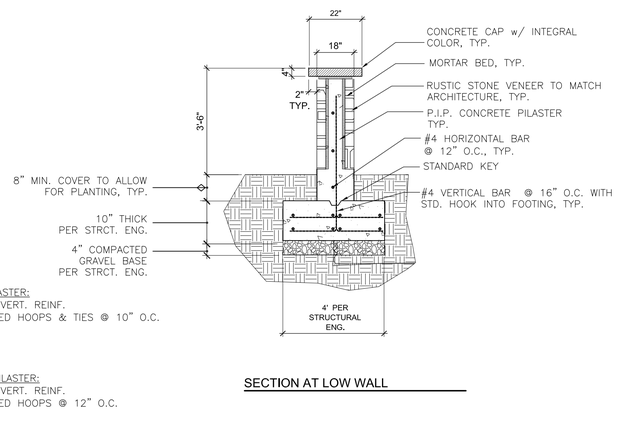

A FAY HILL ROAD ENTRY FEATURE
3/16" = 1'-0"

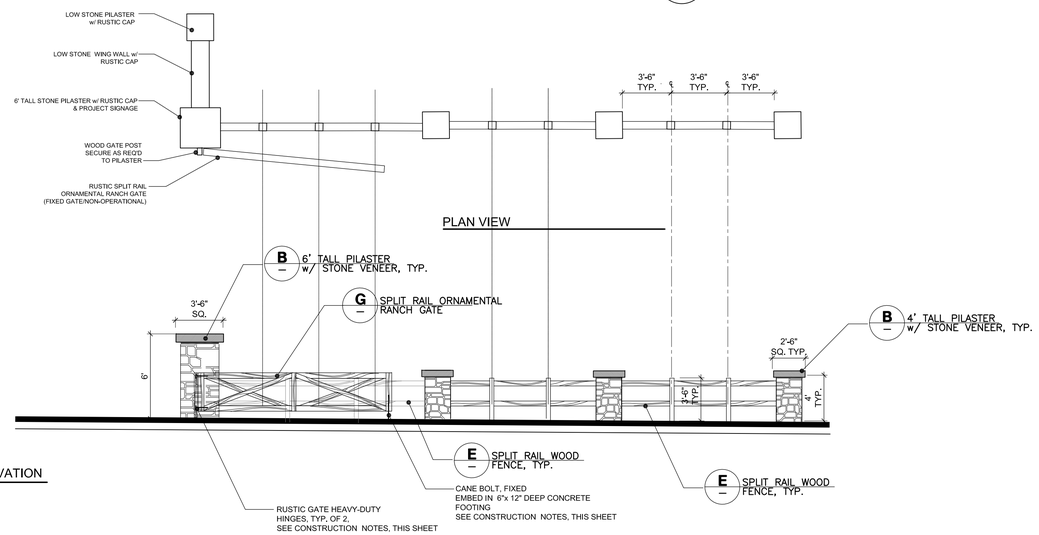

B P.I.P OR CMU BLOCK PILASTER w/ STONE VENEER
3/8" = 1'-0"

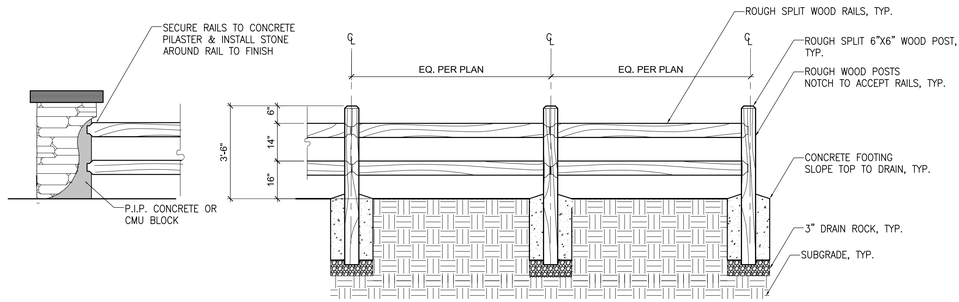

C LOW WALL w/ STONE VENEER
3/8" = 1'-0"

D 'E' STREET ENTRY FEATURE
3/16" = 1'-0"

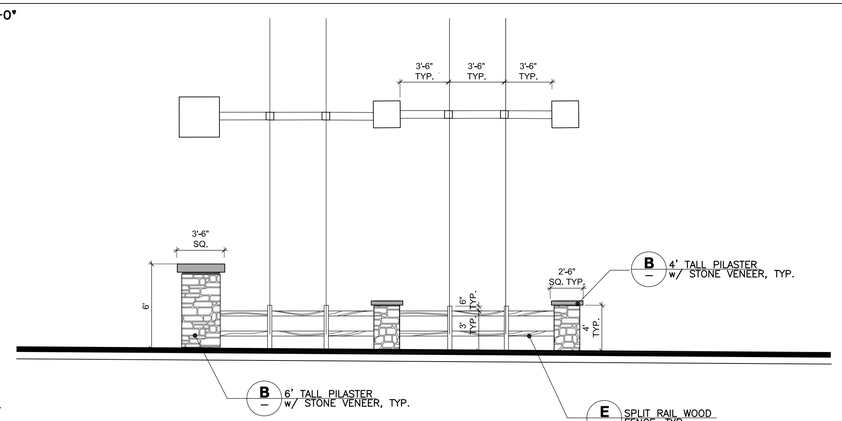

E SPLIT RAIL WOOD FENCE
3/8" = 1'-0"

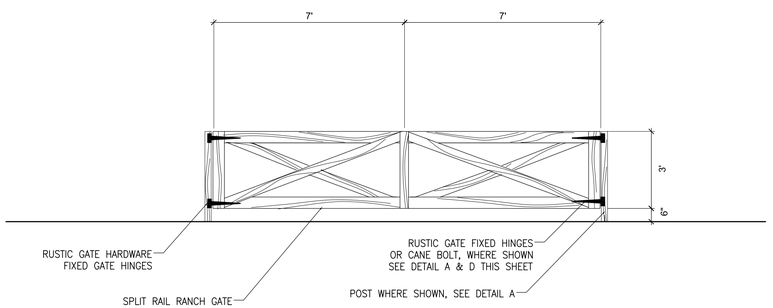

CONTRACTOR TO SUBMIT SHOP DRAWINGS, SEE CONSTRUCTION NOTES, THIS SHEET

CONSTRUCTION NOTES:

1. WOOD: TO BE WESTERN RED CEDAR - SPLIT RAIL.
2. RUSTIC GATE HARDWARE:
   HEAVY DUTY OLD FASHIONED HINGES - 14", #8292-14SP, BLACK COATED, GALVANIZED. QTY: 6
   CANE BOLT: STAINLESS STEEL DROP ROD BOLT #NW38305-SS, BLACK COATED. 24" LONG. QTY: 1
   AVAILABLE THROUGH: HOOVER FENCE COMPANY, (800) 355-2335 www.hooverfence.com OR APPROVED EQUIVALENT.
   ALL GATES TO BE FIXED/NON-OPERATIONAL.
3. STONE VENEER: TO MATCH ARCHITECTURE. SUBMIT CUT SHEETS TO OWNER FOR APPROVAL.
4. PILASTERS AND WALL CAPS: TO BE CONCRETE w/ INTEGRAL COLOR AND SACK FINISH. COLOR TO BE "LIGHT GRAY" BY DAVIS COLORS. SUBMIT SAMPLE TO OWNER FOR APPROVAL.
5. CONTRACTOR TO PROVIDE SHOP DRAWINGS TO OWNER FOR APPROVAL.

F 'D' DRIVE ENTRY FEATURE
3/16" = 1'-0"

G SPLIT RAIL ORNAMENTAL/FIXED RANCH GATE
3/8" = 1'-0"

CLIENT:
SUMMERHILL HOMES
777 SOUTH CALIFORNIA AVE.
PALO ALTO
CA.
94304
TEL 650.842.2421

CALL BEFORE YOU DIG
800.227.2600

LICENSED LANDSCAPE ARCHITECT
ZEKY R. ABED
Lic. No. 3402
Expires
STATE OF CALIFORNIA

VAN DORN ABED
LANDSCAPE ARCHITECTS, INC.
81 14TH ST. SAN FRANCISCO, CA
ZIP 94103 PH (415) 864-1921 FAX(415) 864-6796

COPYRIGHT © 2009 VAN DORN ABED LANDSCAPE ARCHITECTS, INC.
ALL DRAWINGS & WRITTEN MATERIAL APPEARING HEREIN CONSTITUTE ORIGINAL AND UNPUBLISHED WORK OF THE LANDSCAPE ARCHITECT AND THE SAME MAY NOT BE USED, COPIED, OR DISCLOSED WITHOUT THE WRITTEN CONSENT OF VAN DORN ABED LANDSCAPE ARCHITECTS.

PROJECT MANAGER: MW
DRAFTED BY: MW
CHECKED BY: ZA

PROJECT NAME/LOCATION:
RANCHO LAGUNA
MORAGA CA.

DRAWING TITLE:
LANDSCAPE CONSTRUCTION DRAWINGS

REVISIONS:

NO.	DESCRIPTION	BY:	DATE

SHEET TITLE:
LANDSCAPE DETAILS

SCALE: AS NOTED
ISSUE DATE: 02/27/15
PROJECT NO.: V1226
SHEET NO.: L2.1
13 OF 44

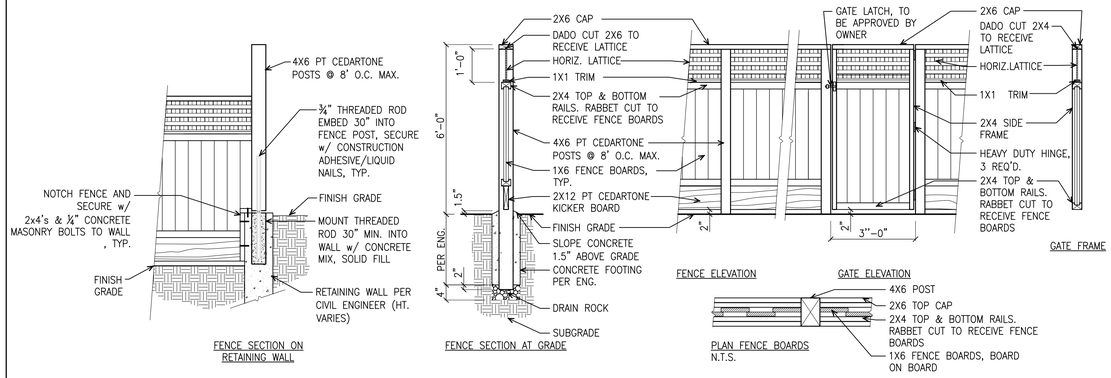

NOTES:

1. ALL POSTS & KICKER SHALL BE PRESSURE TREATED CEDARTONE. ALL OTHER WOOD SHALL BE CON. HEART REDWOOD OR RED CEDAR – OWNER TO SELECT.
2. ALL METAL HARDWARE SHALL BE GALVANIZED STEEL.
3. FOOTINGS PER ENGINEER, TYP.

A GOOD NEIGHBOR WOOD FENCE & GATE w/ LATTICE

3/8" - 1'-0"

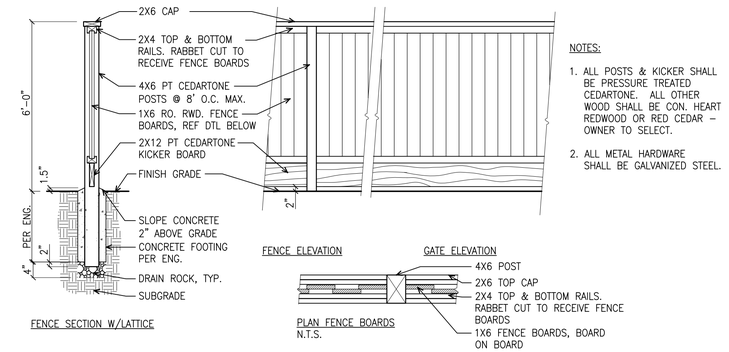

NOTES:

1. ALL POSTS & KICKER SHALL BE PRESSURE TREATED CEDARTONE. ALL OTHER WOOD SHALL BE CON. HEART REDWOOD OR RED CEDAR – OWNER TO SELECT.
2. ALL METAL HARDWARE SHALL BE GALVANIZED STEEL.

B SOLID GOOD NIEGHBOR WOOD FENCE

3/8" - 1'-0"

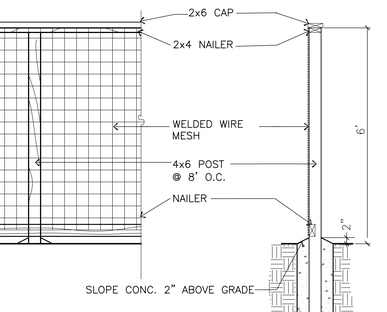

NOTES:

1. WOOD SHALL BE CON. HEART REDWOOD OR RED CEDAR. TO BE SELECTED BY OWNER.
2. POSTS SHALL BE PRESSURE TREATED CEDARTONE.
3. WIRE MESH NO SMALLER THAT 1"x1" MESH, PER TOWN REQUIREMENTS.
4. NAILS TO BE HOT DIPPED GALVANIZED.
5. FOOTINGS PER ENGINEER, TYP.

NOTES:
1. FIELD VERIFY LOCATIONS. DO NOT CONFLICT WITH UTILITIES; ADJUST LOCATIONS AS NECESSARY.
3. ALL HARDWARE SHALL BE HOT DIP GALVANIZED.
4. ALL WOOD TO BE CLEAR CEDAR WITH PENOFIN CLEAR PENETRATING WATERPROOF SEALER.
5. OWNER TO PROVIDE APPROVED ADDRESSES TO CONTRACTOR.
6. CUSTOM LETTERING AVAILABLE THROUGH WWW.DOITYOURSELFLETTERING.COM OR APPROVED EQUIVALENT. OWNER TO PROVIDE ADDRESS NUMBERING AND SELECTED GRAPHICS/FONT TO CONTRACTOR.
7. MAILBOX:
   BREMERTON MAILBOX AND POST SET BY SIGNATURE HARDWARE
   PHONE: 866-855-2284
   WWW.SIGNATUREHARDWARE.COM
   FINISH: BRUSHED STAINLESS STEEL
   SKU: 336364
   OR APPROVED EQUIVALENT

C OPEN WIRE FENCE

1/2" - 1'-0"

NOTE:

1. CONTRACTOR TO PROVIDE SHOP DRAWINGS TO OWNER FOR REVIEW AND APPROVAL.
2. CONTRACTOR TO APPLY 2 COATS PENOFIN CLEAR OR THOMPSONS WATERSEAL OR APPROVED EQUIVALENT.
3. SIGN BOARD SHALL INCLUDE MAP AND SPACE FOR ADDITIONAL INFORMATION – (TO BE PROVIDED BY OTHERS.)

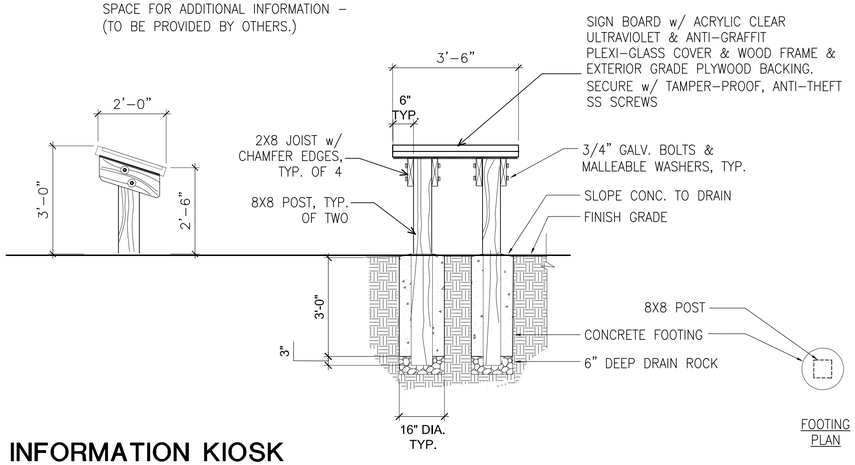

E TRAIL INFORMATION KIOSK

1/2" - 1'-0"

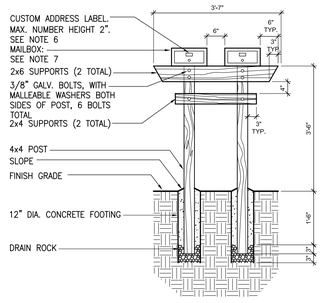

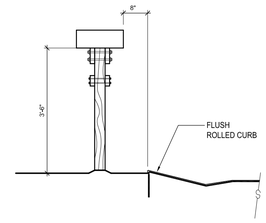

D POST MOUNTED MAILBOXES

1/2" - 1'-0"

CLIENT:
SUMMERHILL HOMES
777 SOUTH CALIFORNIA AVE.
PALO ALTO
CA.
94304
TEL 650.842.2421

CALL BEFORE YOU DIG
811
800.227.2600

LICENSED LANDSCAPE ARCHITECT
ZEKI R. ABED
Lic. No. 3402
Expires
STATE OF CALIFORNIA

VAN DORN ABED
LANDSCAPE ARCHITECTS, INC.
81 14TH ST. SAN FRANCISCO, CA
ZIP 94103 PH (45) 864-921 FAX(415) 864-6796

COPYRIGHT © 2009 VAN DORN ABED LANDSCAPE ARCHITECTS, INC.
ALL DRAWINGS & WRITTEN MATERIAL APPEARING HEREIN CONSTITUTE ORIGINAL UNPUBLISHED WORK OF THE LANDSCAPE ARCHITECT AND THE SAME MAY NOT BE REUSED, COPIED, OR DISCLOSED WITHOUT THE WRITTEN CONSENT OF THE LANDSCAPE ARCHITECT.

PROJECT MANAGER: MW
DRAFTED BY: MW
CHECKED BY: ZA

PROJECT NAME/LOCATION:
RANCHO LAGUNA
MORAGA CA.

DRAWING TITLE:
LANDSCAPE CONSTRUCTION DRAWINGS

REVISIONS:

NO.	DESCRIPTION	BY:	DATE

SHEET TITLE:
LANDSCAPE DETAILS

SCALE: AS NOTED
ISSUE DATE: 02/27/15
PROJECT NO.: V1226
SHEET NO.: L2.2
14 OF 44

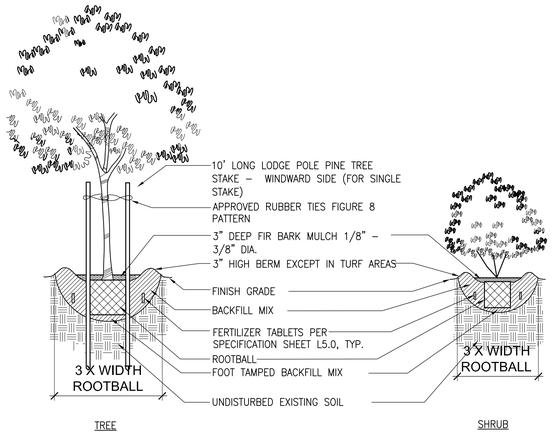

A TREE AND SHRUB PLANTING
NTS

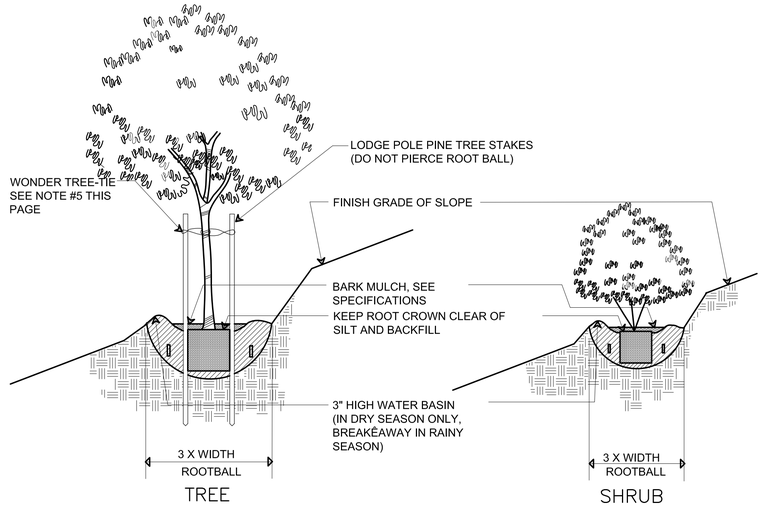

B TREE AND SHRUB PLANTING ON SLOPE
NTS

NOTES:

1. PLANT CROWN SHALL BE 1" ABOVE FINISH GRADE FOR SHRUBS AND 1-1/2" ABOVE FINISH GRADE FOR TREES AFTER WATERING AND SETTLING.
2. ONE 2x2 STAKE FOR 5 GAL. SHRUB STANDARDS AND TWO 2x2 STAKES FOR 15 GAL. SHRUB STANDARDS.
3. ONE STAKE FOR 5 GAL. TREES AND TWO STAKES FOR 15 GAL. & LARGER TREES.
   2 INCH DIA. TREE STAKES FOR 24" BOX AND UNDER
   3 INCH DIA. TREE STAKES FOR 36" BOX AND UP
4. LOCATE STAKES AT OUTSIDE EDGE OF ROOTBALL.
5. WONDER TREE-TIE MODEL# W14-46, W24-84 OR APPROVED EQUAL. SECURE EXPOSED WIRE ENDS TO OUTSIDE OF STAKE - POUND WIRE ENDS INTO STAKE. ALLOW 3 INCHES OF MOVEMENT OF TREE IN ALL DIRECTIONS.
6. SCARIFY SIDES OF PIT.
7. SEE TREE AND SHRUB PLANTING DETAIL FOR GENERAL PLANTING SPECIFICATIONS.

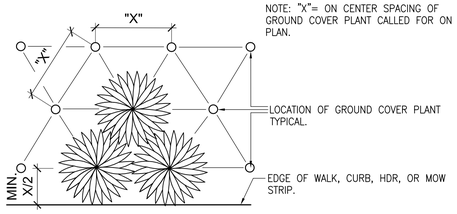

C GROUNDCOVER SPACING
NTS

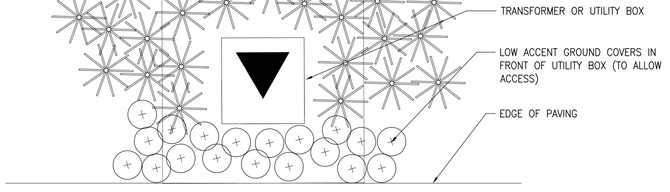

SCREENING DETAIL

D LANDSCAPE SCREENING OF UTILITIES
NTS

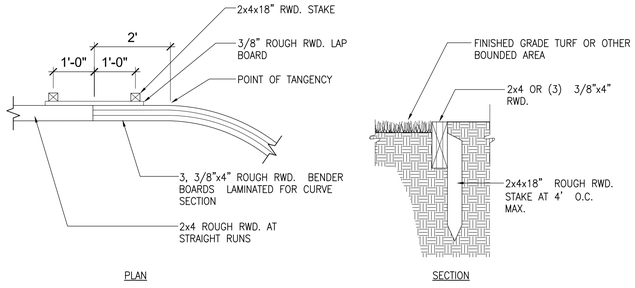

PLAN SECTION

E REDWOOD HEADER
NTS

NOTES:
CONCRETE STEP PADS
SIZE: 18"x 18"
COLOR: NATURAL CONCRETE
FINISH: MEDIUM BROOM. FINISH TO BE SET HORIZONTAL TO PATH OF TRAVEL

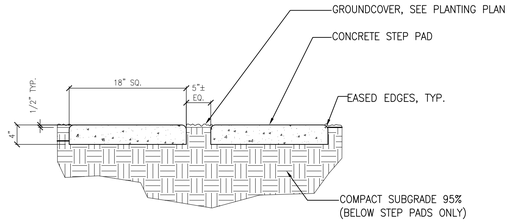

F CONCRETE STEP PADS
NTS

CLIENT:
SUMMERHILL HOMES
777 SOUTH CALIFORNIA AVE.
PALO ALTO
CA.
94304
TEL 650.842.2421

CALL BEFORE YOU DIG
800.227.2600

LICENSED LANDSCAPE ARCHITECT
ZEKI R. ABED
Lic. No. 3402
Expires
STATE OF CALIFORNIA

VAN DORN ABED
LANDSCAPE ARCHITECTS, INC.
81 14TH ST. SAN FRANCISCO, CA
ZIP 94103 PH (415) 864-1921 FAX(415) 864-6796

COPYRIGHT © 2009 VAN DORN ABED LANDSCAPE ARCHITECTS, INC.
ALL DRAWINGS & WRITTEN MATERIAL APPEARING HEREIN CONSTITUTE ORIGINAL UNPUBLISHED WORK OF THE LANDSCAPE ARCHITECTS AND MAY NOT BE COPIED, REPRODUCED, USED, OR DISCLOSED WITHOUT THE WRITTEN CONSENT OF VAN DORN ABED LANDSCAPE ARCHITECTS.

PROJECT MANAGER: MW
DRAFTED BY:
CHECKED BY: ZA

PROJECT NAME/LOCATION:
RANCHO LAGUNA
MORAGA CA.

DRAWING TITLE:
LANDSCAPE CONSTRUCTION DRAWINGS

REVISIONS:

NO.	DESCRIPTION	BY:	DATE

SHEET TITLE:
LANDSCAPE DETAILS

SCALE: AS NOTED
ISSUE DATE: 02/27/15
PROJECT NO.: V1226
SHEET NO.: L2.3
15 OF 44

FAY HILL ROAD

FRONTERA

REVEGETATED HILLSIDE SLOPES
SEE SEPARATE MITIGATION PLANS
& SPECIFICATIONS

GRE NOE 11
5 gal
PHO YEL 2
5 gal

11 CIS WH2
5 gal

SIGHT LINE

PHO YEL 5
5 gal

7 DIE BIC
5 gal
13 CIS WH2
5 gal
17 ERI GLA
5 gal

38 ROS APP
5 gal
16 GRE NOE
5 gal
CIS WH2 10
5 gal
3 PHO YEL
5 gal

SIGHT LINE

CIS WH2 11
5 gal
DIE BIC 7
5 gal
PHO YEL 17
5 gal
LAN NEW 12
5 gal
ARC MAN 3
15 gal
GAR COA 3
15 gal
GRE NOE 10
5 gal

3 HET AR2
15 gal
13 ROS ICE
5 gal
3 CIS WH2
5 gal

10 TAG LEM
1 gal
3 ARC MAN
15 gal

PIT WHE 11
5 gal
LAN NEW 7
5 gal

11 CIS WH2
5 gal
17 PHO YEL
5 gal
6 DIE BIC
5 gal

MITIGATION
PLANTING AREA
SEE SEPARATE MITIGATION
PLANS & SPECIFICATIONS

ARC MAN 3
15 gal

3 GAR COA
15 gal

26 ERI GLA
5 gal

SIGHT LINE

SIGHT LINE

STOP

MATCHLINE L3.1

0 8 16 32 64

CLIENT:
SUMMERHILL HOMES
777 SOUTH CALIFORNIA AVE.
PALO ALTO
CA
94304
TEL 650.842.2421

USA
CALL BEFORE YOU DIG
800.227.2600

LICENSED LANDSCAPE ARCHITECT
ZEKI R. ABED
Lic. No. 3402
Expires
STATE OF CALIFORNIA

VAN DORN ABED
LANDSCAPE ARCHITECTS, INC.
81 14TH ST. SAN FRANCISCO, CA
ZIP 94103 PH (415) 864-1921 FAX(415) 864-6796

COPYRIGHT © 2006 VAN DORN ABED LANDSCAPE ARCHITECTS, INC.
ALL DRAWINGS & WRITTEN MATERIAL APPEARING HEREIN CONSTITUTE ORIGINAL WORK OF VAN DORN ABED LANDSCAPE ARCHITECTS & SHALL NOT BE DUPLICATED, USED OR DISCLOSED WITHOUT WRITTEN CONSENT OF THE LANDSCAPE ARCHITECT.

PROJECT MANAGER: MW
DRAFTED BY:
CHECKED BY:

PROJECT NAME/LOCATION:
RANCHO LAGUNA
MORAGA CA.

DRAWING TITLE:
LANDSCAPE CONSTRUCTION DRAWINGS

REVISIONS:

NO.	DESCRIPTION	BY:	DATE

SHEET TITLE:
PLANTING PLAN

SCALE: 1/16" = 1'-0"
ISSUE DATE: 02/27/15
PROJECT NO.: V1226
SHEET NO.: L3.0
16 of 44

MATCHLINE L3.0

MATCHLINE L3.2

FRONTERA DRIVE

REVEGETATED HILLSIDE SLOPES
SEE SEPARATE MITIGATION PLANS
& SPECIFICATIONS

MITIGATION
PLANTING AREA
SEE SEPARATE MITIGATION
PLANS & SPECIFICATIONS

PLAN 2C — P=767.2

PLAN 3B — P=762.5

PLAN 1A ALT — P=760.0

PLAN 2B — P=755.5

PLAN 3A — P=749.5

0 8 16 32 64

CLIENT:
SUMMERHILL HOMES
777 SOUTH CALIFORNIA AVE.
PALO ALTO
CA
94304
TEL 650.842.2421

USA — CALL BEFORE YOU DIG — 811 — 800.227.2600

LICENSED LANDSCAPE ARCHITECT — ZEKI R. ABED — Lic. No. 3402 — Expires — STATE OF CALIFORNIA

VAN DORN ABED
LANDSCAPE ARCHITECTS, INC.
81 14TH ST. SAN FRANCISCO, CA
ZIP 94103 PH (415) 864-1921 FAX(415) 864-6796

COPYRIGHT © 2005 VAN DORN ABED LANDSCAPE ARCHITECTS, INC.
ALL DRAWINGS & WRITTEN MATERIAL APPEARING HEREIN CONSTITUTE ORIGINAL WORK OF THE ARCHITECT & SAME MAY NOT BE DUPLICATED, USED OR DISCLOSED WITHOUT WRITTEN CONSENT OF THE LANDSCAPE ARCHITECT.

PROJECT MANAGER: MW
DRAFTED BY:
CHECKED BY:

PROJECT NAME/LOCATION:
RANCHO LAGUNA
MORAGA
CA.

DRAWING TITLE:
LANDSCAPE
CONSTRUCTION DRAWINGS

REVISIONS:

NO.	DESCRIPTION	BY:	DATE

SHEET TITLE:
PLANTING
PLAN

SCALE: 1/16" = 1'-0"
ISSUE DATE: 02/27/15
PROJECT NO.: V1226
SHEET NO.: L3.1
17 of 44

CLIENT:

SUMMERHILL HOMES
777 SOUTH CALIFORNIA AVE.
PALO ALTO
CA
94304
TEL 650.842.2421

CALL BEFORE YOU DIG — CITY UTILITIES — PHONE DATA — CABLE TV — P.G.&E. — USA
800.227.2600

LICENSED LANDSCAPE ARCHITECT
ZEKI R. ABED
Lic. No. 3402
Expires
STATE OF CALIFORNIA

VAN DORN ABED
LANDSCAPE ARCHITECTS, INC.
81 14TH ST. SAN FRANCISCO, CA
ZIP 94103 PH (415) 864-1921 FAX(415) 864-4796

COPYRIGHT © 2006 VAN DORN ABED LANDSCAPE ARCHITECTS, INC.
ALL DRAWINGS & WRITTEN MATERIAL APPEARING HEREIN CONSTITUTE THE ORIGINAL & UNPUBLISHED WORK OF THE LANDSCAPE ARCHITECT & SAME MAY NOT BE DUPLICATED, USED, OR DISCLOSED WITHOUT THE WRITTEN CONSENT OF THE LANDSCAPE ARCHITECT.

PROJECT MANAGER: MW
DRAFTED BY:
CHECKED BY:

PROJECT NAME/LOCATION:
RANCHO LAGUNA
MORAGA CA.

DRAWING TITLE:
LANDSCAPE
CONSTRUCTION DRAWINGS

REVISIONS:

NO.	DESCRIPTION	BY:	DATE

SHEET TITLE:
PLANTING PLAN

SCALE: 1/16" = 1'-0"
ISSUE DATE: 02/27/15
PROJECT NO.: V1226
SHEET NO.: L3.2

REVEGETATED HILLSIDE SLOPES
SEE SEPARATE MITIGATION PLANS
& SPECIFICATIONS

0+00

ARC EME | 5 | 5 gal
3 ARC MAN | 15 gal
DIE BIC | 13 | 5 gal
GAL BOC | 6 | 5 gal
CIS WH2 | 5 | 5 gal
PIT WHE | 11 | 5 gal
LAN NEW | 8 | 5 gal
5 GAR COA | 15 gal
14 LAN NEW | 5 gal
10 DIE BIC | 5 gal
6 ERI GLA | 5 gal
5 PIT WHE | 5 gal
ERI GLA | 8 | 5 gal
CIS WH2 | 8 | 5 gal
PIT WHE | 10 | 5 gal
GAR COA | 5 | 15 gal
ARC MAN | 3 | 15 gal
8 ERI GLA | 5 gal
5 GAL BOC | 5 gal
5 SAL CLE | 5 gal
18 ARC EME | 5 gal
7 EPI HUM | 5 gal
18 SAL CLE | 5 gal
4 SAL MEL | 5 gal
8 GAL BOC | 5 gal
ARC MAN | 2 | 15 gal
6 EPI HUM | 5 gal
4 EPI HUM | 5 gal
4 SAL MEL | 5 gal
7 EPI HUM | 5 gal
ARC MAN | 4 | 15 gal
HET AR2 | 2 | 15 gal
3 GAR COA | 15 gal
CER BET | 3 | 15 gal
3 ARC MAN | 15 gal
3 GAR COA | 15 gal
3 ARC MAN | 15 gal
HET AR2 | 3 | 15 gal
CER BET | 3 | 15 gal

SONORA ROAD

SONORA ROAD

REVEGETATED HILLSIDE SLOPES
SEE SEPARATE MITIGATION PLANS
& SPECIFICATIONS

MATCHLINE L3.4

0 8 16 32 64

CLIENT:
SUMMERHILL HOMES
777 SOUTH CALIFORNIA AVE.
PALO ALTO
CA
94304
TEL 650.842.2421

USA
CALL BEFORE YOU DIG
811
800.227.2600

LICENSED LANDSCAPE ARCHITECT
ZEKI R. ABED
Lic. No. 3402
Expires
STATE OF CALIFORNIA

VAN DORN ABED
LANDSCAPE ARCHITECTS, INC.
81 14TH ST. SAN FRANCISCO, CA
ZIP 94103 PH (415) 864-9211 FAX(415) 864-6796

PROJECT MANAGER: MW
DRAFTED BY:
CHECKED BY:

COPYRIGHT © 2015 VAN DORN ABED LANDSCAPE ARCHITECTS, INC.
ALL DRAWINGS & WRITTEN MATERIAL APPEARING HEREIN CONSTITUTE ORIGINAL WORK OF THE ARCHITECT & SAME MAY NOT BE DUPLICATED, USED OR DISCLOSED WITHOUT WRITTEN CONSENT OF THE LANDSCAPE ARCHITECT.

PROJECT NAME/LOCATION:
RANCHO LAGUNA
MORAGA CA.

DRAWING TITLE:
LANDSCAPE
CONSTRUCTION DRAWINGS

REVISIONS:

NO.	DESCRIPTION	BY:	DATE

SHEET TITLE:
PLANTING PLAN

SCALE: 1/16" = 1'-0"
ISSUE DATE: 02/27/15
PROJECT NO.: V1226
SHEET NO.: L3.3
19 OF 44

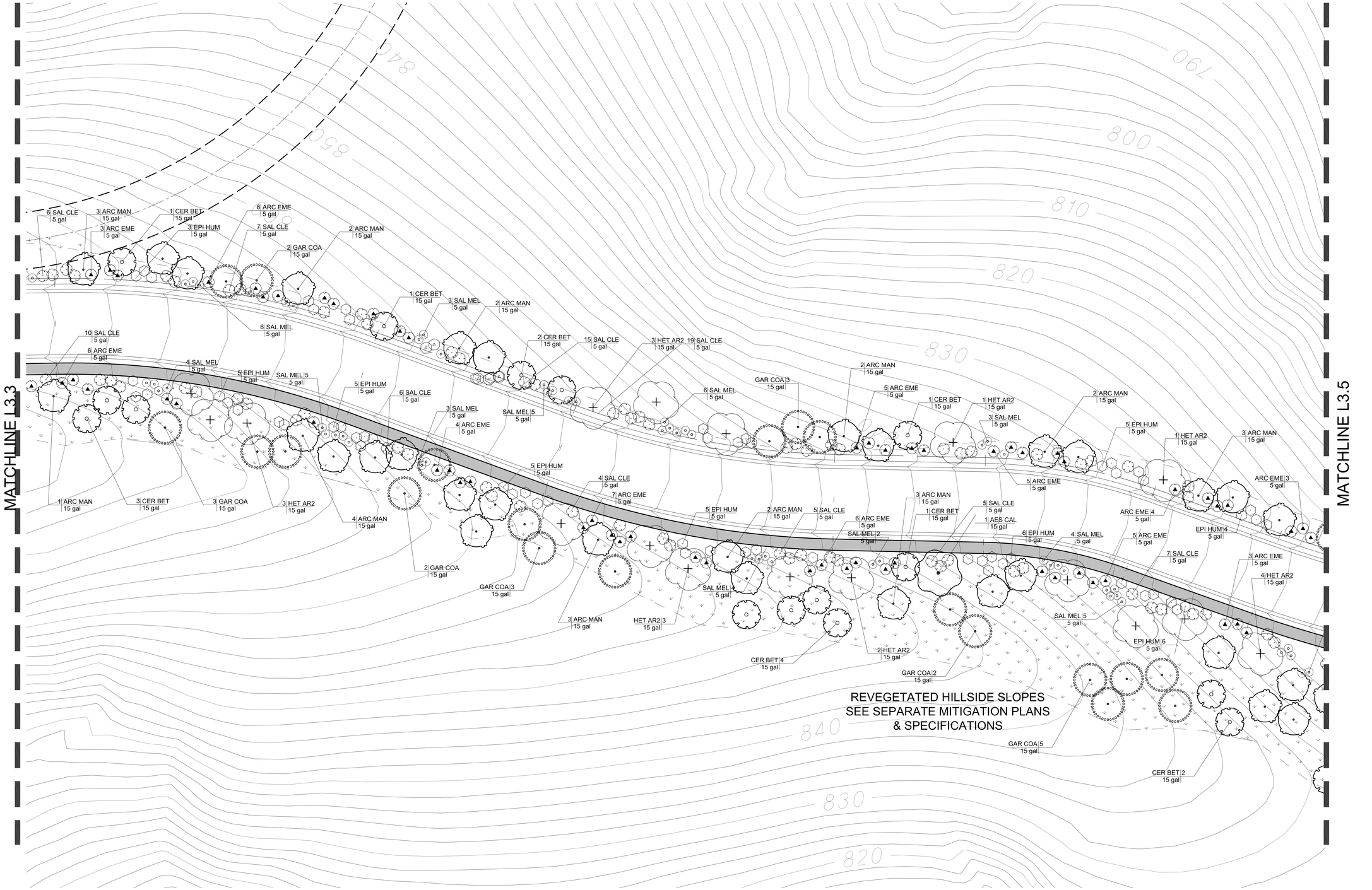

CLIENT:
SUMMERHILL HOMES
777 SOUTH CALIFORNIA AVE.
PALO ALTO
CA
94304
TEL 650.842.2421

CITY UTILITIES PHONE DATA
CALL BEFORE YOU DIG
P.O.&E. CABLE TV
800.227.2600

LICENSED LANDSCAPE ARCHITECT
ZEKI R. ABED
Lic. No. 3402
Expires
STATE OF CALIFORNIA

VAN DORN ABED
LANDSCAPE ARCHITECTS, INC.
81 14TH ST. SAN FRANCISCO, CA
ZIP 94103 PH (415) 864-1921 FAX(415) 864-4796

COPYRIGHT © 2005 VAN DORN ABED LANDSCAPE ARCHITECTS, INC.
ALL DRAWINGS & WRITTEN MATERIAL APPEARING HEREIN CONSTITUTE THE ORIGINAL & UNPUBLISHED WORK OF THE LANDSCAPE ARCHITECT & SAME MAY NOT BE DUPLICATED, USED, OR DISCLOSED WITHOUT THE WRITTEN CONSENT OF THE LANDSCAPE ARCHITECT.

PROJECT MANAGER: MW
DRAFTED BY:
CHECKED BY:

PROJECT NAME/LOCATION:
RANCHO LAGUNA
MORAGA CA.

DRAWING TITLE:
LANDSCAPE CONSTRUCTION DRAWINGS

REVISIONS: NO.	DESCRIPTION	BY:	DATE

SHEET TITLE:
PLANTING PLAN

SCALE: 1/16" = 1'-0"
ISSUE DATE: 02/27/15
PROJECT NO.: V1226
SHEET NO.: L3.4
20 OF 44

MATCHLINE L3.4

MATCHLINE L3.6

SONORA ROAD

REVEGETATED HILLSIDE SLOPES
SEE SEPARATE MITIGATION PLANS
& SPECIFICATIONS

REVEGETATED HILLSIDE SLOPES
SEE SEPARATE MITIGATION PLANS
& SPECIFICATIONS

25 CIS WH2 5 gal
1 GAR COA 15 gal
15 SAL CLE 5 gal
12 ARC MAN 15 gal
20 ARC EME 5 gal
1 CER BET 15 gal
1 GAR COA 15 gal
3 HET AR2 15 gal
2 CER BET 15 gal
GAR COA 3 15 gal
HET AR2 2 15 gal
2 ARC MAN 15 gal
ARC MAN 8 15 gal
CER BET 3 15 gal
GAR COA 3 15 gal
AES CAL 3 15 gal
SAL MEL 3 5 gal
5 SAL MEL 5 gal
4 SAL CLE 5 gal
2 SAL MEL 5 gal
SAL MEL 4 5 gal
CER BET 1 15 gal
ARC MAN 4 15 gal
SAL MEL 3 5 gal
3 ARC EME 5 gal
6 ARC MAN 15 gal
3 SAL MEL 5 gal
5 SAL CLE 5 gal
5 EPI HUM 5 gal
3 HET AR2 15 gal
3 ARC EME 5 gal
5 SAL CLE 5 gal
7 SAL CLE 5 gal
3 HET AR2 15 gal
7 ARC EME 5 gal
SAL MEL 5 5 gal
AES CAL 3 15 gal
6 EPI HUM 5 gal
5 EPI HUM 5 gal
3 EPI HUM 5 gal
CER BET 1 15 gal
2 SAL CLE 5 gal
CIS WH2 5 gal
SAL MEL 3 5 gal
ARC EME 2 5 gal
4 ARC EME 5 gal
4 HET AR2 15 gal
5 SAL CLE 5 gal
1 CER BET 15 gal
EPI HUM 2 5 gal
5 SAL MEL 5 gal
2 ARC EME 5 gal
3 SAL CLE 5 gal
HET AR2 2 15 gal
ARB HYB 1 15 gal
ERI GLA 20 5 gal
PIT CRE 16 5 gal
1 CER WES 15 GAL MULTI
OLE EUR 1 24"box
ERI GLA 10 5 gal
PIT CRE 7 5 gal
3 SAL MEL 5 gal
2 ARC EME 5 gal
5 EPI HUM 5 gal
ARC EME 5 5 gal
5 SAL MEL 5 gal
SAL CLE 3 5 gal
EPI HUM 5 5 gal
ARC EME 4 5 gal
EPI HUM 3 5 gal
SAL CLE 3 5 gal
HET AR2 2 15 gal
29 ARC MAN 15 gal
6 CER BET 15 gal
GAR COA 1 15 gal
CER BET 1 15 gal
AES CAL 3 15 gal
6 ARC MAN 15 gal
2 CER BET 15 gal
CER BET 2 15 gal
GAR COA 4 15 gal
CER BET 5 15 gal
ARC MAN 7 15 gal
GAR COA 3 15 gal
CER BET 2 15 gal
GAR COA 3 15 gal
ARC MAN 4 15 gal
6 GAL BOC 5 gal
2 COL PUL 5 gal
13 FES EL2 1 gal
3 ANI HYP 5 gal
5 GRE NOE 5 gal
1 ESC CO2 5 gal
4 BER GOL 5 gal
MYR DWA 4 5 gal
LAV RE2 3 5 gal
LIG TE3 3 5 gal
PHO YEL 7 5 gal
CIS WH2 8 5 gal
DIE BIC 6 5 gal
COR MAR 14 1 gal
AGA STO 8 1 gal
ROS APP 21 5 gal

0 8 16 32 64

CLIENT:
SUMMERHILL HOMES
777 SOUTH CALIFORNIA AVE.
PALO ALTO
CA
94304
TEL 650.842.2421

800.227.2600

LICENSED LANDSCAPE ARCHITECT
ZEKI R. ABED
Lic. No. 3402
Expires
STATE OF CALIFORNIA

VAN DORN ABED
LANDSCAPE ARCHITECTS, INC.
81 14TH ST. SAN FRANCISCO, CA
ZIP 94103 PH (415) 864-1921 FAX(415) 864-6796

PROJECT MANAGER: MW
DRAFTED BY:
CHECKED BY:

COPYRIGHT © 2005 VAN DORN ABED LANDSCAPE ARCHITECTS, INC.
ALL DRAWINGS & WRITTEN MATERIAL APPEARING HEREIN CONSTITUTE ORIGINAL WORK OF THE ARCHITECT & SAME MAY NOT BE DUPLICATED, USED OR DISCLOSED WITHOUT WRITTEN CONSENT OF THE LANDSCAPE ARCHITECT.

PROJECT NAME/LOCATION:
RANCHO LAGUNA
MORAGA CA.

DRAWING TITLE:
LANDSCAPE CONSTRUCTION DRAWINGS

REVISIONS: NO.	DESCRIPTION:	BY:	DATE

SHEET TITLE:
PLANTING PLAN

SCALE: 1/16" = 1'-0"
ISSUE DATE: 02/27/15
PROJECT NO.: V1226
SHEET NO.: L3.5
21 OF 44

CLIENT:
SUMMERHILL HOMES
777 SOUTH CALIFORNIA AVE.
PALO ALTO
CA
94304
TEL 650.842.2421

CALL BEFORE YOU DIG — USA — CITY UTILITIES — PHONE DATA — P.G.&E. — CABLE TV
800.227.2600

LICENSED LANDSCAPE ARCHITECT
ZEKI R. ABED
Lic. No. 3402
Expires
STATE OF CALIFORNIA

VAN DORN ABED
LANDSCAPE ARCHITECTS, INC.
81 14TH ST. SAN FRANCISCO, CA
ZIP 94103 PH (415) 864-1921 FAX(415) 864-4796

COPYRIGHT © 2006 VAN DORN ABED LANDSCAPE ARCHITECTS, INC.
ALL DRAWINGS & WRITTEN MATERIAL APPEARING HEREIN CONSTITUTE THE ORIGINAL & UNPUBLISHED WORK OF THE LANDSCAPE ARCHITECT & SAME MAY NOT BE DUPLICATED, USED, OR DISCLOSED WITHOUT THE WRITTEN CONSENT OF THE LANDSCAPE ARCHITECT.

PROJECT MANAGER: MW
DRAFTED BY:
CHECKED BY:

PROJECT NAME/LOCATION:
RANCHO LAGUNA
MORAGA CA.

DRAWING TITLE:
LANDSCAPE CONSTRUCTION DRAWINGS

REVISIONS: NO.	DESCRIPTION	BY:	DATE

SHEET TITLE:
PLANTING PLAN

SCALE: 1/16" = 1'-0"
ISSUE DATE: 02/27/15
PROJECT NO.: V1226
SHEET NO.: L3.6

MATCHLINE L3.8

MATCHLINE L3.6

MATCHLINE L3.8

SONORA ROAD

SONORA ROAD

710

720

20
P=716.0
PLAN 5B

21
P=726.0

22
P=735.0
PLAN 5C

23
P=743.0
PLAN 5A

24
P=751.0

15
P=723.0
PLAN 5C

14
P=734.5

3:1 SLOPE - NO TURF

3.5:1 SLOPE - NO TURF

2.5:1 SLOPE - NO TURF

3.5:1 SLOPE - NO TURF

WES MOR 2 5 gal
GRE NOE 3 5 gal
LIG TE3 11 5 gal
GRE NOE 9 5 gal
PUN CHI 9 5 gal
GAL BOC 5 gal
PHO YEL 6 5 gal
ROS CAL 7 5 gal
AGA STO 21 1 gal
PUN CHI 9 5 gal
GRE NOE 7 5 gal
ANI HYP 1 5 gal
HEB HYB 4 5 gal
ERI GLA 11 5 gal
COL PUL 11 5 gal
PUN CHI 6 5 gal
ANI HYP 3 5 gal
PIT KOH 7 5 gal
1 PRU KWA 24"box
WES MOR 4 5 gal
LAN NEW 8 5 gal
DIE BIC 3 5 gal
6 PHO YEL 5 gal
LAV RE2 1 5 gal
OLE EUR 1 24"box
TAG LEM 6 1 gal
PIT CRE 15 5 gal
DIE BIC 6 5 gal
ROS WHT 9 5 gal
1 PRU KWA 24"box
HEB HYB 5 5 gal
HEU SAN 33 1 gal
ROS ICE 8 5 gal
CEA GRI 5 5 gal
CIS WH2 5 5 gal
GRE NOE 10 5 gal
AGA STO 5 1 gal
7 COT MIC 5 gal
TAG LEM 1 1 gal
PIT WHE 3 5 gal
GAL BOC 6 5 gal
PUN CHI 10 5 gal
1 AGA STO 1 gal
BER GOL 9 5 gal
OLE EUR 1 24"box
WES MOR 5 gal
11 ESC CO2 5 gal
LAN NEW 10 5 gal
1 ARB HYB 15 gal
FES EL2 55 1 gal
DIE BIC 12 5 gal
1 CER WES 15 GAL MULTI
9 PHO YEL 5 gal
26 AGA STO 1 gal
MAG LIL 1 15 gal
4 ERI GLA 5 gal
ESC CO2 11 5 gal
12 COT MIC 5 gal
LAN NEW 6 5 gal
ANI HYP 2 5 gal
ARB MUL 1 24"box
COT MIC 12 5 gal
AGA STO 37 1 gal
MAG AL 2 24"box
1 ARB MUL 24"box
13 BER GOL 5 gal
PUN CHI 7 5 gal
7 GRE NOE 5 gal
5 ERI GLA 5 gal
COP KIR 9 5 gal
11 COL PUL 5 gal
CAL LIT 17 5 gal
OLE EUR 1 24"box
9 ROS CAL 5 gal
HEB HYB 9 5 gal
2 MAG LIL 15 gal
GRE NOE 10 5 gal
1 PRU KWA 24"box
PUN CHI 10 5 gal
ERI GLA 9 5 gal
ROS APP 12 5 gal
6 CAL LIT 5 gal
1 OLE EUR 24"box
FES EL2 36 1 gal
7 PHO YEL 5 gal
6 ROS APP 5 gal
8 TAG LEM 1 gal
TAG LEM 3 1 gal
3 PRU KWA 24"box
ARB MUL 1 24"box
FES EL2 47 1 gal
CAL LIT 7 5 gal
5 LAV RE2 5 gal
4 WES MOR 5 gal
6 WES MOR 5 gal
6 BER GOL 5 gal
6 TAG LEM 1 gal
BER GOL 11 5 gal
8 LAN NEW 5 gal
9 ESC CO2 5 gal
GRE NOE 29 5 gal
MAG STE 1 15 gal
8 ERI GLA 5 gal
1 OLE EUR 24"box
ARB MUL 1 24"box
DIE BIC 13 5 gal
2 RED VIB 5 gal
7 ERI GLA COT MIC 9 5 gal
HEM HYB 4 5 gal
14 PRU BRE 5 gal
9 LAN NEW 5 gal
HEB HYB 4 5 gal
5 BER GOL OLE EUR 1 24"box
8 PHO YEL 5 gal
CAL LIT 5 5 gal
1 PRU KWA 24"box
9 COL PUL 5 gal
3 PIT KOH 5 gal
7 CAL LIT 5 gal
1 TIB URV 5 gal
11 WES MOR 5 gal
11 PIT WHE 5 gal
17 ERY BOW 5 gal
DIE BIC 5 gal
ESC CO2 2 5 gal
ERY BOW 5 gal
GAL BOC 3 5 gal
COL PUL 4 5 gal
PHO YEL 7 5 gal
PHO YEL 7 5 gal
ROS ICE 5 6 gal
GRE NOE 18 5 gal
LAV RE2 6 5 gal
PHO YEL 12 5 gal
COL PUL 8 5 gal
LIG TE3 5 5 gal
CEA GRI 7 5 gal
PIT WHE 8 5 gal
DIE BIC 3 5 gal
4 TAG LEM 1 gal
ESC CO2 6 5 gal
2 DIE BIC 5 gal
PIT KOH 7 5 gal
GRE NOE 6 5 gal
RHA CLA 6 5 gal
ROS ICE 4 5 gal
CIS WH2 6 5 gal
ANI HYP 2 5 gal
5 RHA SEA 5 gal
9 ROS CAL 5 gal
PIT CRE 11 5 gal
ESC CO2 7 5 gal
PIT CRE 12 5 gal
COL PUL 14 5 gal
PIT CRE 3 5 gal
PHO YEL 17 5 gal
LAV RE2 1 5 gal
FES EL2 57 1 gal
PIT KOH 10 5 gal
ROS YEL 19 5 gal
COP KIR 24 5 gal
ERY BOW 4 5 gal
PUN CHI 8 5 gal
4 ESC CO2 5 gal
2 CER WES

0 8 16 32 64

CLIENT:
SUMMERHILL HOMES
777 SOUTH CALIFORNIA AVE.
PALO ALTO
CA
94304
TEL 650.842.2421

CALL BEFORE YOU DIG
811
IT'S FREE AND IT'S THE LAW
800.227.2600

LICENSED LANDSCAPE ARCHITECT
ZEKI R. ABED
Lic. No. 3402
Expires
STATE OF CALIFORNIA

VAN DORN ABED
LANDSCAPE ARCHITECTS, INC.
81 14TH ST. SAN FRANCISCO, CA
ZIP 94103 PH (415) 864-1921 FAX(415) 864-6796

COPYRIGHT © 2015 VAN DORN ABED LANDSCAPE ARCHITECTS, INC.
ALL DRAWINGS & WRITTEN MATERIAL APPEARING HEREIN CONSTITUTE ORIGINAL WORK OF THE ARCHITECT & SAME MAY NOT BE DUPLICATED, USED OR DISCLOSED WITHOUT WRITTEN CONSENT OF THE LANDSCAPE ARCHITECT.

PROJECT MANAGER: MW
DRAWN BY:
CHECKED BY:

PROJECT NAME/LOCATION:
RANCHO LAGUNA
MORAGA CA.
DRAWING TITLE:
LANDSCAPE CONSTRUCTION DRAWINGS

REVISIONS: NO.	DESCRIPTION:	BY:	DATE

SHEET TITLE:
PLANTING PLAN

SCALE: 1/16" = 1'-0"
ISSUE DATE: 02/27/15
PROJECT NO.: V1226
SHEET NO.: L3.7
23 OF 44

MATCHLINE L3.9

0 8 16 32 64

CLIENT:
SUMMERHILL HOMES
777 SOUTH CALIFORNIA AVE.
PALO ALTO
CA
94304
TEL 650.842.2421

USA
CALL BEFORE YOU DIG
800.227.2600

LICENSED LANDSCAPE ARCHITECT
ZEKI R. ABED
Lic. No. 3402
Expires
STATE OF CALIFORNIA

VAN DORN ABED
LANDSCAPE ARCHITECTS, INC.
81 14TH ST. SAN FRANCISCO, CA
ZIP 94103 PH (415) 864-921 FAX(415) 864-6796

PROJECT MANAGER: MW
DRAFTED BY:
CHECKED BY:

COPYRIGHT © 2015 VAN DORN ABED LANDSCAPE ARCHITECTS, INC.
ALL DRAWINGS & WRITTEN MATERIAL APPEARING HEREIN CONSTITUTE ORIGINAL UNPUBLISHED WORK OF THE LANDSCAPE ARCHITECT & SAME MAY NOT BE DUPLICATED, USED OR DISCLOSED WITHOUT WRITTEN CONSENT OF THE LANDSCAPE ARCHITECT.

PROJECT NAME/LOCATION:
RANCHO LAGUNA
MORAGA CA.

DRAWING TITLE:
LANDSCAPE CONSTRUCTION DRAWINGS

REVISIONS: NO.	DESCRIPTION	BY:	DATE

SHEET TITLE:
PLANTING PLAN

SCALE: 1/16" = 1'-0"
ISSUE DATE: 02/27/15
PROJECT NO.: V1226
SHEET NO.: L3.8
24 OF 44

MATCHLINE L3.8

MATCHLINE L3.7

LOS SANTOS COURT

SIGHT LINE

P=734.5

PLAN 6A

13

P=739.0

PLAN 3B

12

P=729.5

PLAN 2C

2 CER WES | 15 GAL MULTI
2 LAV RE2 | 5 gal
2 ARB HYB | 15 gal
14 ERY BOW | 5 gal
12 RHA SEA | 5 gal
1 CER WES | 15 GAL MULTI
8 LAV RE2 | 5 gal
13 GRE NOE | 5 gal
1 AES CAL | 15 gal
34 COT MIC | 5 gal
2 CER WES | 15 GAL MULTI
8 GRE NOE | 5 gal
2 CER WES | 15 GAL MULTI
5 OLE EUR | 24"box
COP KIR | 13 | 5 gal
LAN NEW | 13 | 5 gal
COP KIR | 5 gal
LAN NEW | 5 gal
GRE NOE | 7 | 5 gal
6 SAL CLE | 5 gal
GRE NOE | 12 | 5 gal
COP KIR | 10 | 5 gal
1 PRU BRI | 5 gal
9 LAN NEW | 5 gal
16 ERI GLA | 5 gal
3 DIE BIC | 5 gal
8 DIE BIC | 5 gal
5 HEU SAN | 1 gal
10 FES EL2 | 1 gal
2 ANI HYP | 5 gal
5 SAL MEL | 5 gal
ARB MUL | 1 | 24"box
PHO YEL | 3 | 5 gal
7 ARC EME | 5 gal
ROS APP | 7 | 5 gal
1 CER BET | 15 gal
CER WES | 1 | 15 GAL MULTI
ESC CO2 | 7 | 5 gal
ROS ICE | 5 | 5 gal
HEU SAN | 25 | 1 gal
SAL CLE | 5 gal
4 SAL MEL | 5 gal
2 ARC EME | 5 gal
GRE NOE | 7 | 5 gal
CAL LIT | 9 | 5 gal
ARB MUL | 1 | 24"box
ROS APP | 4 | 5 gal
PHO YEL | 6 | 5 gal
CAL LIT | 2 | 5 gal
6 ROS ICE | 5 gal
2 DIE BIC | 5 gal
3 LAV RE2 | 5 gal
3 TAG LEM | 1 gal
15 LIG TE3 | 5 gal
RHA SEA | 7 | 5 gal
ERY BOW | 10 | 5 gal
CEA GRI | 18 | 5 gal
AES CAL | 1 | 15 gal
COT MIC | 17 | 5 gal
ARC EME | 1 | 5 gal
OLE EUR | 1 | 24"box
SAL CLE | 5 gal
6 EPI HUM | 5 gal
1 CER BET | 15 gal
ARB HYB | 2 | 15 gal
15 CAL LIT | 5 gal
3 ARC EME | 5 gal
3 HET AR2 | 15 gal
5 EPI HUM | 5 gal
1 ARC MAN | 15 gal
4 ARC EME | 5 gal
2 SAL CLE | 5 gal
SAL MEL | 3 | 5 gal
CER WES | 4 | 15 GAL MULTI
ARC MAN | 3 | 15 gal
PHO YEL | 7 | 5 gal
8 CIS WH2 | 5 gal
18 FES EL2 | 1 gal
10 COP KIR | 5 gal
4 DIE BIC | 5 gal
14 COL PUL | 5 gal
15 ERI GLA | 5 gal
2 ANI HYP | 5 gal
LAV RE2 | 9 | 5 gal
GRE NOE | 4 | 5 gal
PRU KWA | 1 | 24"box
PIT CRE | 14 | 5 gal
AGA STO | 7 | 1 gal
ARC EME | 4 | 5 gal
ARC EME | 3 | 5 gal
SAL CLE | 7 | 5 gal
ARC EME | 4 | 5 gal
ARB HYB | 1 | 15 gal
ARB HYB | 1 | 15 gal
GAL BOC | 8 | 5 gal
GRE NOE | 8 | 5 gal
ARC MAN | 2 | 15 gal
AGA STO | 8 | 1 gal
GRE NOE | 14 | 5 gal
34 COT MIC | 5 gal
8 GAL BOC | 5 gal
1 OLE EUR | 24"box
6 PHO YEL | 5 gal
9 PUN CHI | 5 gal
5 EPI HUM | 5 gal
2 HET AR2 | 15 gal
2 CER BET | 15 gal
4 HET AR2 | 15 gal
2 EPI HUM | 5 gal
7 ARC MAN | 15 gal
GAR COA | 3 | 15 gal
GAR COA | 3 | 15 gal
SAL MEL | 4 | 5 gal
HET AR2 | 5 | 15 gal
CER BET | 2 | 15 gal
AES CAL | 4 | 15 gal
SAL CLE | 5 | 5 gal
GAR COA | 4 | 15 gal
HET AR2 | 3 | 15 gal
ARC MAN | 9 | 15 gal
CER BET | 1 | 15 gal
GAR COA | 2 | 15 gal

REVEGETATED HILLSIDE SLOPES
SEE SEPARATE MITIGATION PLANS
& SPECIFICATIONS

0 8 16 32 64

CLIENT:
SUMMERHILL HOMES
777 SOUTH CALIFORNIA AVE.
PALO ALTO
CA
94304
TEL 650.842.2421

800.227.2600

LICENSED LANDSCAPE ARCHITECT
ZEKI R. ABED
Lic. No. 3402
Expires
STATE OF CALIFORNIA

VAN DORN ABED
LANDSCAPE ARCHITECTS, INC.
81 14TH ST. SAN FRANCISCO, CA
ZIP 94103 PH (415) 864-1921 FAX(415) 864-6796

PROJECT MANAGER: MW
DRAWN BY:
CHECKED BY:

COPYRIGHT © 2006 VAN DORN ABED LANDSCAPE ARCHITECTS, INC.
ALL DRAWINGS & WRITTEN MATERIAL APPEARING HEREIN CONSTITUTE ORIGINAL WORK OF THE LANDSCAPE ARCHITECT & SAME MAY NOT BE DUPLICATED, USED OR DISCLOSED WITHOUT WRITTEN CONSENT OF THE LANDSCAPE ARCHITECT.

PROJECT NAME/LOCATION:
RANCHO LAGUNA
MORAGA CA.

DRAWING TITLE:
LANDSCAPE
CONSTRUCTION DRAWINGS

REVISIONS: NO.	DESCRIPTION	BY:	DATE

SHEET TITLE:
PLANTING PLAN

SCALE: 1/16" = 1'-0"
ISSUE DATE: 02/27/15
PROJECT NO.: V1226
SHEET NO.: L3.9
25 OF 44

PLANT SCHEDULE

TREES	CODE	BOTANICAL NAME	COMMON NAME	CONT	QTY	REMARKS
	ACE SAN	Acer palmatum `Sango Kaku`	Coral Bark Maple	24"box	5	M
	AES CAL	Aesculus californica	California Buckeye	15 gal	34	VL
	ARB HYB	Arbutus x `Marina`	Arbutus	15 gal	13	L
	ARB MUL	Arbutus x `Marina`	Arbutus Multi-Trunk	24"box	17	L
	ARC MAN	Arctostaphylos manzanita `Dr. Hurd`	Dr. Hurd Manzanita	15 gal	177	L
	CER WES	Cercis occidentalis	Western Redbud Multi-trunk	15 GAL MULTI	46	L
	CER BET	Cercocarpus betuloides	Mountain Mahogany	15 gal	81	L
	FRA OXY	Fraxinus oxycarpa `Raywood` TM	Raywood Ash	15 gal	1	L
	GAR COA	Garrya elliptica	Coast Silktassel	15 gal	88	
	HET AR2	Heteromeles arbutifolia	Toyon	15 gal	77	
	MAG STE	Magnolia stellata `Royal Star`	Royal Star Magnolia	15 gal	4	M
	MAG AL2	Magnolia x soulangiana `Alexandrina`	Saucer Magnolia Multi-Trunk	24"box	6	M
	MAG LIL	Magnolia x soulangiana `Lilliputian`	Lilliputian Magnolia	15 gal	3	M
	OLE EUR	Olea europaea `Swan Hill` TM	Fruitless Olive	24"box	28	VL
	PRU KWA	Prunus serrulata `Kwanzan`	Flowering Cherry	24"box	14	M

SHRUBS	CODE	BOTANICAL NAME	COMMON NAME	SIZE	QTY	REMARKS
	AGA STO	Agapanthus x `Storm Cloud`	Dark Blue Lily of the Nile	1 gal	298	M
	ANI HYP	Anisodontea x hypomandarum -STD	Cape Mallow	5 gal	27	STANDARD
	ARC EME	Arctostaphylos x `Emerald Carpet`	Emerald Carpet Manzanita	5 gal	250	L -Enhanced Streets
	BER GOL	Berberis thunbergii `Golden Ring`	Barberry	5 gal	80	M
	BER PER	Bergenia x `Perfect`	Bergenia	1 gal	31	M
	CAL LIT	Callistemon citrinus `Little John`	Dwarf Bottle Brush	5 gal	105	L
	CEA GRI	Ceanothus griseus horizontalis `Yankee Point`	California Lilac	5 gal	112	L - 2 to 3 tall
	CIS WH2	Cistus x hybridus	White Rockrose	5 gal	223	L
	COL PUL	Coleonema pulchrum	Pink Breath Of Heaven	5 gal	152	L
	COP KIR	Coprosma kirkii	Creeping Mirror Plant	5 gal	123	L
	COR MAR	Coreopsis maritima	Sea Dahlia	1 gal	26	L
	COT MIC	Cotoneaster microphyllus	Rockspray Cotoneaster	5 gal	293	L
	DIE BIC	Dietes bicolor	Fortnight Lily	5 gal	234	L
	EPI HUM	Epilobium canum	California Fuchsia	5 gal	195	
	ERI GLA	Erigeron glaucus	Beach Daisy	5 gal	469	L
	ERY BOW	Erysimum x `Bowles` Mauve`	Wallflower	5 gal	114	L
	ESC CO2	Escallonia x `Compacta`	Compact Escallonia	5 gal	150	M
	FES EL2	Festuca glauca `Elijah Blue`	Blue Fescue	1 gal	628	L
	GAL BOC	Galvezia speciosa `Boca Rosa`	Island Snapdragon	5 gal	140	L
	GRE NOE	Grevillea x `Noellii`	Grevillea	5 gal	392	L
	HEB HYB	Hebe x `Wiri Blush`	Wiri Blush Hebe	5 gal	68	M
	HEM HYB	Hemerocallis Hybrid	Daylily	5 gal	10	L
	HEU SAN	Heuchera maxima `Santa Ana Cardinal`	Island Alum Root	1 gal	425	L
	LAN NEW	Lantana montevidensis `New Gold`	Trailing Lantana	5 gal	282	L
	LAV RE2	Lavatera thuringiaca `Red Rum`	Tree Mallow	5 gal	65	M
	LIG TE3	Ligustrum texanum	Texas Privet	5 gal	89	L
	LIR GIG	Liriope gigantea	Giant Liriope	1 gal	64	M
	MYR DWA	Myrtus communis `Compacta`	Dwarf Myrtle	5 gal	26	L
	PHO YEL	Phormium x `Yellow Wave`	New Zealand Flax	5 gal	311	L
	PIT KOH	Pittosporum tenuifolium `Kohuhu`	Tawhiwhi	5 gal	87	M
	PIT CRE	Pittosporum tobira `Cream De Mint` TM	Cream De Mint Dwarf Mock Orange	5 gal	331	L
	PIT WHE	Pittosporum tobira `Wheelers Dwarf`	Wheeler`s Dwarf Mock Orange	5 gal	151	L
	PRU BRI	Prunus caroliniana `Bright `N Tight` TM	Bright `N Tight Carolina Laurel	5 gal	58	L
	PUN CHI	Punica granatum `Chico`	Dwarf Pomegranate	5 gal	231	L
	RHA SEA	Rhamnus californica `Sea View`	California Coffee Berry	5 gal	67	L - groundcover 1 to 2
	RHA CLA	Rhaphiolepis indica `Clara`	Indian Hawthorn	5 gal	16	L
	RIB VIB	Ribes viburnifolium	Evergreen Currant	5 gal	32	L
	ROS CAL	Rosa californica	California Wild Rose	5 gal	65	L
	ROS ICE	Rosa floribunda `Iceburg`	Iceburg Rose	5 gal	128	M
	ROS APP	Rosa x `Flower Carpet Appleblossom` TM	Rose	5 gal	296	L
	ROS WHT	Rosa x `Flower Carpet White`	Rose	5 gal	43	L
	ROS YEL	Rosa x `Flower Carpet Yellow`	Yellow Rose	5 gal	44	L
	SAL CLE	Salvia clevelandii	Cleveland Sage	5 gal	199	L
	SAL MEL	Salvia mellifera	Black Sage	5 gal	149	
	TAG LEM	Tagetes lemmonii	Copper Canyon Daisy	1 gal	94	L

REVEGETATE HILLSIDE SLOPES - SEE SEPERATE MITIGATION PLANS AND SPECIFICATIONS

Festuca Eliator "Medallion Sod

CLIENT:
SUMMERHILL HOMES
777 SOUTH CALIFORNIA AVE.
PALO ALTO
CA
94304
TEL 650.842.2421

CALL BEFORE YOU DIG
USA
800.227.2600

LICENSED LANDSCAPE ARCHITECT
ZEKI R. ABED
Lic. No. 3402
Expires
STATE OF CALIFORNIA

VAN DORN ABED
LANDSCAPE ARCHITECTS, INC.
81 14TH ST. SAN FRANCISCO, CA
ZIP 94103 PH (415) 864-921 FAX(415) 864-6796

COPYRIGHT © 2006 VAN DORN ABED LANDSCAPE ARCHITECTS, INC.
ALL DRAWINGS & WRITTEN MATERIAL APPEARING HEREIN CONSTITUTE ORIGINAL WORK OF VAN DORN ABED LANDSCAPE ARCHITECTS & SAME MAY NOT BE DUPLICATED, USED OR DISCLOSED WITHOUT WRITTEN CONSENT OF THE LANDSCAPE ARCHITECT.

PROJECT MANAGER: MW
DRAFTED BY:
CHECKED BY:

PROJECT NAME/LOCATION:
RANCHO LAGUNA
MORAGA CA.

DRAWING TITLE:
LANDSCAPE CONSTRUCTION DRAWINGS

REVISIONS:

NO.	DESCRIPTION:	BY:	DATE

SHEET TITLE:
PLANTING LEGEND

SCALE:

ISSUE DATE:
02/27/15

PROJECT NO.:
V1226

SHEET NO.:
L3.10
26 OF 44

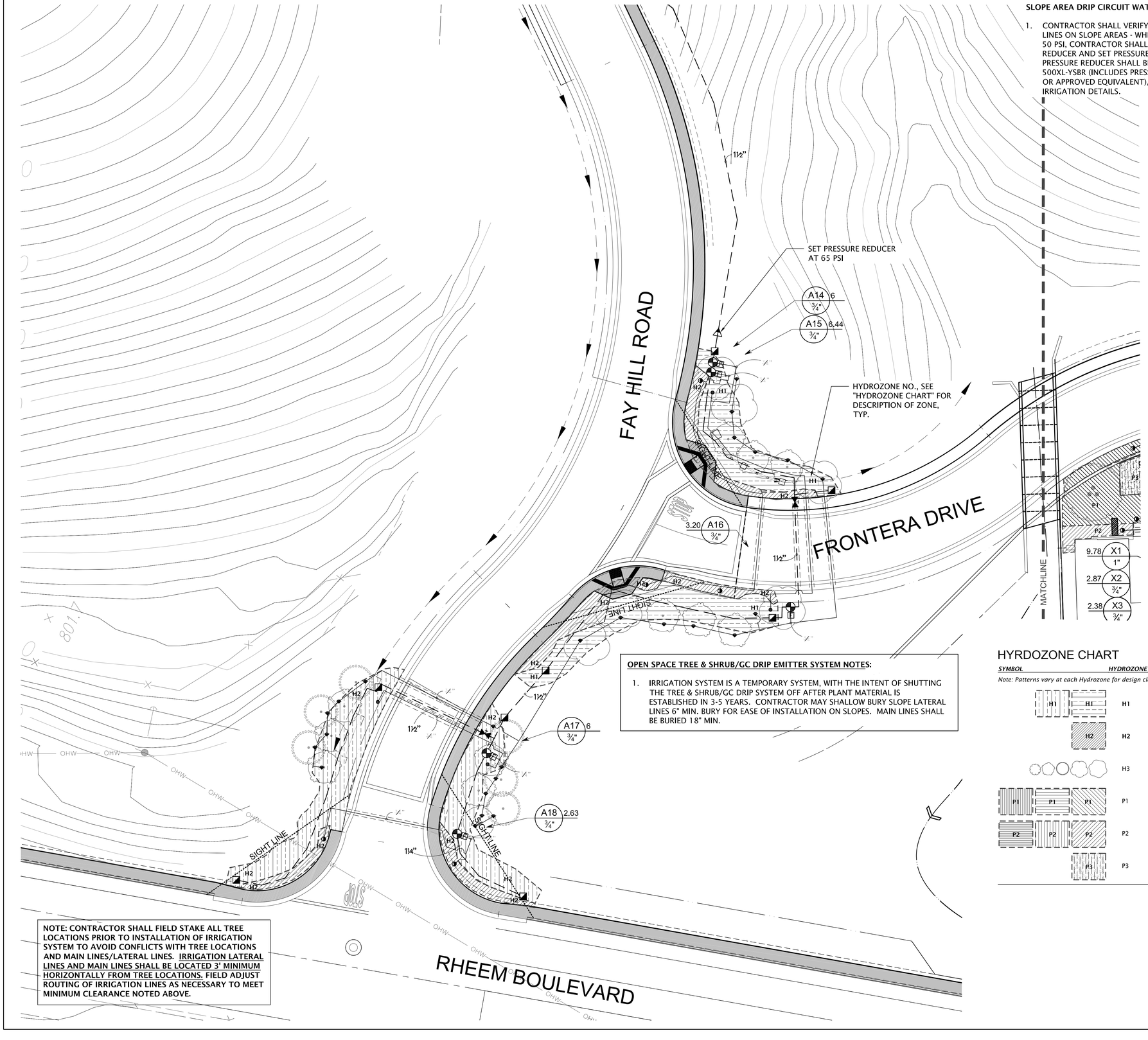

NOTE: CONTRACTOR SHALL FIELD STAKE ALL TREE LOCATIONS PRIOR TO INSTALLATION OF IRRIGATION SYSTEM TO AVOID CONFLICTS WITH TREE LOCATIONS AND MAIN LINES/LATERAL LINES. IRRIGATION LATERAL LINES AND MAIN LINES SHALL BE LOCATED 3' MINIMUM HORIZONTALLY FROM TREE LOCATIONS. FIELD ADJUST ROUTING OF IRRIGATION LINES AS NECESSARY TO MEET MINIMUM CLEARANCE NOTED ABOVE.

OPEN SPACE TREE & SHRUB/GC DRIP EMITTER SYSTEM NOTES:

1. IRRIGATION SYSTEM IS A TEMPORARY SYSTEM, WITH THE INTENT OF SHUTTING THE TREE & SHRUB/GC DRIP SYSTEM OFF AFTER PLANT MATERIAL IS ESTABLISHED IN 3-5 YEARS. CONTRACTOR MAY SHALLOW BURY SLOPE LATERAL LINES 6" MIN. BURY FOR EASE OF INSTALLATION ON SLOPES. MAIN LINES SHALL BE BURIED 18" MIN.

SLOPE AREA DRIP CIRCUIT WATER PRESSURE NOTES:

1. CONTRACTOR SHALL VERIFY PRESSURE IN LATERAL LINES ON SLOPE AREAS - WHERE PRESSURE EXCEEDS 50 PSI, CONTRACTOR SHALL INSTALL A PRESSURE REDUCER AND SET PRESSURE REDUCER TO 35 PSI. PRESSURE REDUCER SHALL BE WILKINS LEAD FREE 500XL-YSBR (INCLUDES PRESSURE REDUCER & FILTER; OR APPROVED EQUIVALENT), LINE SIZE, SEE IRRIGATION DETAILS.

GENERAL NOTES:

1. THIS DESIGN IS DIAGRAMMATIC. ALL PIPING, VALVES, ETC., SHOWN WITHIN PAVED AREAS ARE FOR DESIGN CLARIFICATION ONLY AND SHALL BE INSTALLED IN PLANTING AREAS WHERE POSSIBLE, UNLESS OTHERWISE NOTED. AVOID ANY CONFLICTS BETWEEN THE IRRIGATION SYSTEM, PLANTING AND ARCHITECTURAL FEATURES. LOCATE TURF AREA REMOTE CONTROL VALVE(S) IN SHRUB PLANTING AREAS - DO NOT LOCATE IN TURF AREAS OR BIOSWALE/BIORETENTION AREAS.
2. CONTRACTOR SHALL PERFORM PRESSURE TESTS (STATIC & DYNAMIC) AND FLOW TESTS (GPM) AT POINT OF CONNECTION (P.O.C.) PRIOR TO BEGINNING WORK. SEE IRRIGATION NOTES FOR PRESSURE AND FLOW TEST REQUIREMENTS AND PROCEDURES. CONTRACTOR SHALL BE RESPONSIBLE FOR ANY CORRECTIVE MEASURES REQUIRED TO IRRIGATION SYSTEM, AT NO ADDITIONAL COST TO THE OWNER, IF IRRIGATION SYSTEM IS INSTALLED WITHOUT REQUIRED TESTS, AND DISCREPANCIES IN PRESSURE AND FLOW AT THE P.O.C. ARE DISCOVERED THAT PREVENT THE IRRIGATION SYSTEM FROM FUNCTIONING CORRECTLY.

WATER PRESSURE AT P.O.C. NOTES:

1. CONTRACTOR SHALL VERIFY WATER PRESSURE ON SITE. IF PRESSURE IS 65 PSI OR HIGHER AT P.O.C., CONTRACTOR SHALL INSTALL A PRESSURE REDUCER AS SHOWN, AND SET PRESSURE REDUCER TO 65 PSI. PRESSURE REDUCER SHALL BE WILKINS LEAD FREE 500XL-YSBR (INCLUDES PRESSURE REDUCER & FILTER), LINE SIZE, SEE IRRIGATION DETAILS.
2. IF PRESSURE IS LESS THAN 65 PSI OMIT PRESSURE REDUCER.
3. IF PRESSURE IS LESS THAN 55 PSI NOTIFY OWNER'S REPRESENTATIVE AND LANDSCAPE ARCHITECT FOR CORRECTIVE MEASURES.

SLEEVE NOTES:

1. FOR DESIGN CLARITY, NOT ALL SLEEVES SHOWN. CONTRACTOR SHALL SLEEVE ALL PIPES CROSSING UNDER PAVED AREAS.
2. WHERE LATERAL LINES WITH SLEEVES CROSS ROADS OR DRIVEWAYS, CONTRACTOR SHALL INSTALL ONE SPARE 4" CLASS 315 PVC SLEEVE.
3. WHERE MAIN LINES WITH SLEEVES CROSS ROADS OR DRIVEWAYS, CONTRACTOR SHALL INSTALL ONE SPARE 6" CLASS 315 PVC SLEEVE.

HYRDOZONE CHART

SYMBOL	*HYDROZONE*	*DESCRIPTION*
Note: Patterns vary at each Hydrozone for design clarity; each pattern type at each lot/open area is connected to it's own remote control valve.		
H1	H1	**HOA ENTRY & OPEN SPACE AREAS:** LOW WATER USE, SUN EXPOSURE, SHRUB & GROUND COVER AREAS WITH ON-GRADE DRIP EMITTERS.
H2	H2	**HOA ENTRY AREAS:** MEDIUM WATER USE, SUN EXPOSURE, GROUND COVER AREAS WITH BURIED DRIPLINE.
H3	H3	**HOA ENTRY & OPEN SPACE TREE AREAS:** LOW WATER USE, SUN EXPOSURE, TREES WITH ON-GRADE DRIP EMITTERS.
P1	P1	**PRIVATE FRONT YARD AREAS:** MEDIUM WATER USE, SUN EXPOSURE, TREE, SHRUB & GROUND COVER AREAS WITH BURIED DRIPLINE.
P2	P2	**PRIVATE FRONT YARD AREAS:** MEDIUM WATER USE, PARTIAL SHADE EXPOSURE, TREE, SHRUB & GROUND COVER AREAS WITH BURIED DRIPLINE.
P3	P3	**PRIVATE FRONT YARD AREAS:** HIGH WATER USE, SUN EXPOSURE, TURF AREAS WITH BURIED DRIPLINE.

0 8 16 32 64

CLIENT:
SUMMERHILL HOMES
777 SOUTH CALIFORNIA AVE.
PALO ALTO
CA
94304
TEL 650.842.2421

811 UNDERGROUND SERVICE ALERT
CALL BEFORE YOU DIG
811 TWO WORKING DAYS BEFORE YOU DIG
800.227.2600

LICENSED LANDSCAPE ARCHITECT
JEFF R. ABED
Lic. No. 3402
Expires
STATE OF CALIFORNIA

VAN DORN ABED
LANDSCAPE ARCHITECTS, INC.
81 14TH ST. SAN FRANCISCO, CA
ZIP 94103 PH (415) 864-1921 FAX(415) 864-6796

COPYRIGHT © 2006 VAN DORN ABED LANDSCAPE ARCHITECTS, INC.
ALL DRAWINGS & WRITTEN MATERIAL APPEARING HEREIN CONSTITUTE ORIGINAL WORK OF THE ARCHITECT & SAME MAY NOT BE DUPLICATED, USED OR DISCLOSED WITHOUT WRITTEN CONSENT OF THE LANDSCAPE ARCHITECT.

PROJECT MANAGER: MW
DRAWN BY: EO
CHECKED BY:

PROJECT NAME/LOCATION:
RANCHO LAGUNA
MORAGA, CA.
DRAWING TITLE:
LANDSCAPE CONSTRUCTION DRAWINGS

REVISIONS:

NO.	DESCRIPTION	BY:	DATE

SHEET TITLE:
IRRIGATION PLAN

SCALE: 1/16" = 1'-0"
ISSUE DATE: 02/27/15
PROJECT NO.: V1226
SHEET NO.: L4.0
27 OF 44

GENERAL NOTES:

1. THIS DESIGN IS DIAGRAMMATIC. ALL PIPING, VALVES, ETC., SHOWN WITHIN PAVED AREAS ARE FOR DESIGN CLARIFICATION ONLY AND SHALL BE INSTALLED IN PLANTING AREAS WHERE POSSIBLE, UNLESS OTHERWISE NOTED. AVOID ANY CONFLICTS BETWEEN THE IRRIGATION SYSTEM, PLANTING AND ARCHITECTURAL FEATURES. LOCATE TURF AREA REMOTE CONTROL VALVE(S) IN SHRUB PLANTING AREAS - DO NOT LOCATE IN TURF AREAS OR BIOSWALE/BIORETENTION AREAS.

2. CONTRACTOR SHALL PERFORM PRESSURE TESTS (STATIC & DYNAMIC) AND FLOW TESTS (GPM) AT POINT OF CONNECTION (P.O.C.) PRIOR TO BEGINNING WORK. SEE IRRIGATION NOTES FOR PRESSURE AND FLOW TEST REQUIREMENTS AND PROCEDURES. CONTRACTOR SHALL BE RESPONSIBLE FOR ANY CORRECTIVE MEASURES REQUIRED TO IRRIGATION SYSTEM, AT NO ADDITIONAL COST TO THE OWNER, IF IRRIGATION SYSTEM IS INSTALLED WITHOUT REQUIRED TESTS, AND DISCREPANCIES IN PRESSURE AND FLOW AT THE P.O.C. ARE DISCOVERED THAT PREVENT THE IRRIGATION SYSTEM FROM FUNCTIONING CORRECTLY.

WATER PRESSURE AT P.O.C. NOTES:

1. CONTRACTOR SHALL VERIFY WATER PRESSURE ON SITE. IF PRESSURE IS 65 PSI OR HIGHER AT P.O.C., CONTRACTOR SHALL INSTALL A PRESSURE REDUCER AS SHOWN, AND SET PRESSURE REDUCER TO 65 PSI. PRESSURE REDUCER SHALL BE WILKINS LEAD FREE 500XL-YSBR (INCLUDES PRESSURE REDUCER & FILTER), LINE SIZE, SEE IRRIGATION DETAILS..

2. IF PRESSURE IS LESS THAN 65 PSI OMIT PRESSURE REDUCER.

3. IF PRESSURE IS LESS THAN 55 PSI NOTIFY OWNER'S REPRESENTATIVE AND LANDSCAPE ARCHITECT FOR CORRECTIVE MEASURES.

SLEEVE NOTES:

1. FOR DESIGN CLARITY, NOT ALL SLEEVES SHOWN. CONTRACTOR SHALL SLEEVE ALL PIPES CROSSING UNDER PAVED AREAS.

2. WHERE LATERAL LINES WITH SLEEVES CROSS ROADS OR DRIVEWAYS, CONTRACTOR SHALL INSTALL ONE SPARE 4" CLASS 315 PVC SLEEVE.

3. WHERE MAIN LINES WITH SLEEVES CROSS ROADS OR DRIVEWAYS, CONTRACTOR SHALL INSTALL ONE SPARE 6" CLASS 315 PVC SLEEVE.

SLOPE AREA DRIP CIRCUIT WATER PRESSURE NOTES:

1. CONTRACTOR SHALL VERIFY PRESSURE IN LATERAL LINES ON SLOPE AREAS - WHERE PRESSURE EXCEEDS 50 PSI, CONTRACTOR SHALL INSTALL A PRESSURE REDUCER AND SET PRESSURE REDUCER TO 35 PSI. PRESSURE REDUCER SHALL BE WILKINS LEAD FREE 500XL-YSBR (INCLUDES PRESSURE REDUCER & FILTER; OR APPROVED EQUIVALENT), LINE SIZE, SEE IRRIGATION DETAILS.

HYRDOZONE CHART

SYMBOL	HYDROZONE	DESCRIPTION
H1	H1	**HOA ENTRY & OPEN SPACE AREAS:** LOW WATER USE, SUN EXPOSURE, SHRUB & GROUND COVER AREAS WITH ON-GRADE DRIP EMITTERS.
H2	H2	**HOA ENTRY AREAS:** MEDIUM WATER USE, SUN EXPOSURE, GROUND COVER AREAS WITH BURIED DRIPLINE.
H3	H3	**HOA ENTRY & OPEN SPACE TREE AREAS:** LOW WATER USE, SUN EXPOSURE, TREES WITH ON-GRADE DRIP EMITTERS.
P1	P1	**PRIVATE FRONT YARD AREAS:** MEDIUM WATER USE, SUN EXPOSURE, TREE, SHRUB & GROUND COVER AREAS WITH BURIED DRIPLINE.
P2	P2	**PRIVATE FRONT YARD AREAS:** MEDIUM WATER USE, PARTIAL SHADE EXPOSURE, TREE, SHRUB & GROUND COVER AREAS WITH BURIED DRIPLINE.
P3	P3	**PRIVATE FRONT YARD AREAS:** HIGH WATER USE, SUN EXPOSURE, TURF AREAS WITH BURIED DRIPLINE.

Note: Patterns vary at each Hydrozone for design clarity; each pattern type at each lot/open area is connected to it's own remote control valve.

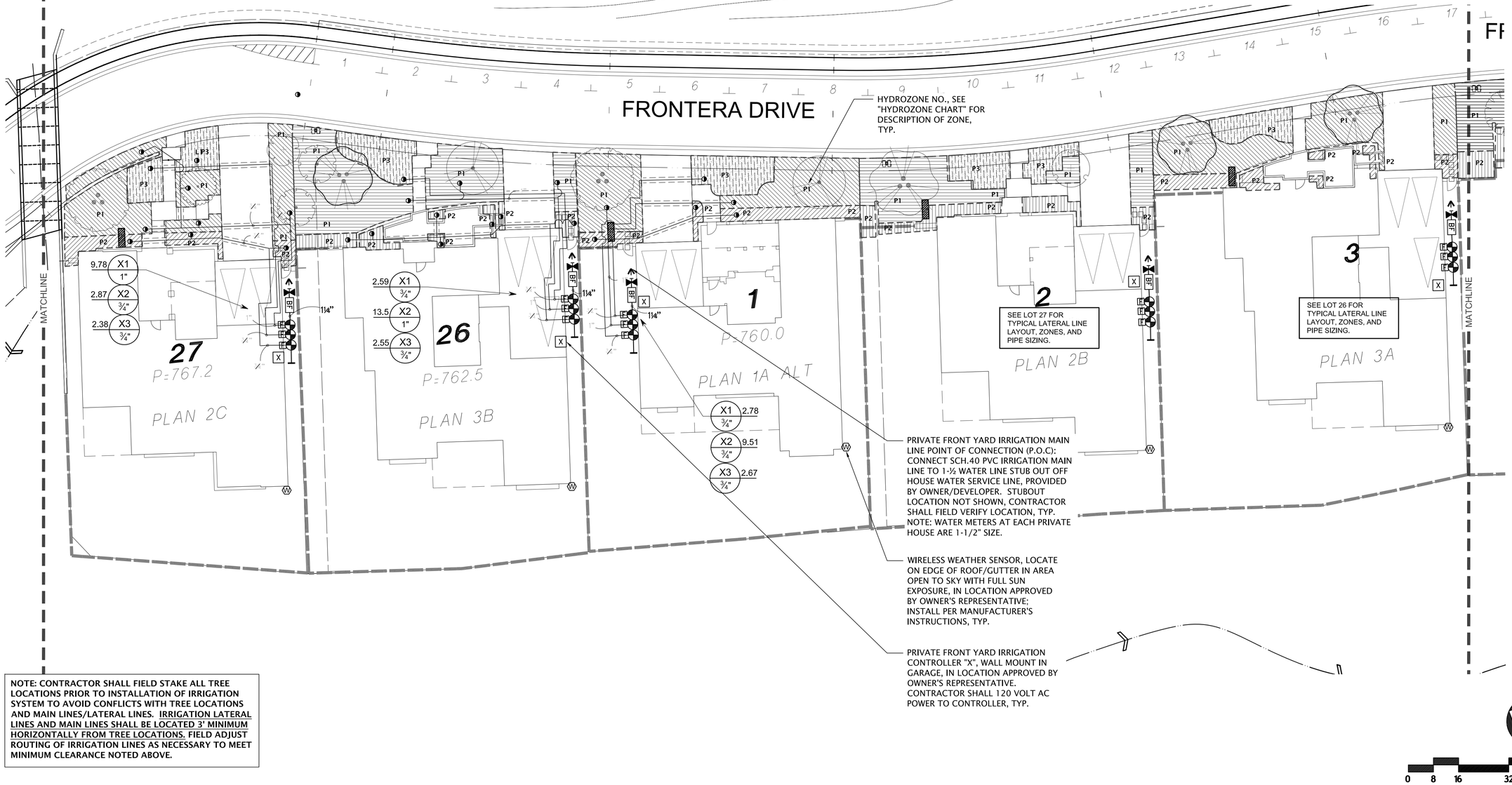

NOTE: CONTRACTOR SHALL FIELD STAKE ALL TREE LOCATIONS PRIOR TO INSTALLATION OF IRRIGATION SYSTEM TO AVOID CONFLICTS WITH TREE LOCATIONS AND MAIN LINES/LATERAL LINES. IRRIGATION LATERAL LINES AND MAIN LINES SHALL BE LOCATED 3' MINIMUM HORIZONTALLY FROM TREE LOCATIONS. FIELD ADJUST ROUTING OF IRRIGATION LINES AS NECESSARY TO MEET MINIMUM CLEARANCE NOTED ABOVE.

CLIENT:
SUMMERHILL HOMES
777 SOUTH CALIFORNIA AVE.
PALO ALTO
CA
94304
TEL 650.842.2421

CALL BEFORE YOU DIG
811
800.227.2600

LICENSED LANDSCAPE ARCHITECT
JERI R. ABED
Lic. No. 3402
Expires
STATE OF CALIFORNIA

VAN DORN ABED
LANDSCAPE ARCHITECTS, INC.
81 14TH ST. SAN FRANCISCO, CA
ZIP 94103 PH (415) 864-1921 FAX(415) 864-6796

COPYRIGHT © 2006 VAN DORN ABED LANDSCAPE ARCHITECTS, INC.
ALL DRAWINGS & WRITTEN MATERIAL APPEARING HEREIN CONSTITUTE ORIGINAL WORK OF THE ARCHITECT & SAME MAY NOT BE DUPLICATED, USED OR DISCLOSED WITHOUT WRITTEN CONSENT OF THE LANDSCAPE ARCHITECT.

PROJECT MANAGER: MW
DRAWN BY: EO
CHECKED BY:

PROJECT NAME/LOCATION:
RANCHO LAGUNA
MORAGA CA.

DRAWING TITLE:
LANDSCAPE CONSTRUCTION DRAWINGS

REVISIONS:

NO.	DESCRIPTION	BY:	DATE

SHEET TITLE:
IRRIGATION PLAN

SCALE: 1/16" = 1'-0"
ISSUE DATE: 02/27/15
PROJECT NO.: V1226
SHEET NO.: L4.1
28 OF 44

GENERAL NOTES:

1. THIS DESIGN IS DIAGRAMMATIC. ALL PIPING, VALVES, ETC., SHOWN WITHIN PAVED AREAS ARE FOR DESIGN CLARIFICATION ONLY AND SHALL BE INSTALLED IN PLANTING AREAS WHERE POSSIBLE, UNLESS OTHERWISE NOTED. AVOID ANY CONFLICTS BETWEEN THE IRRIGATION SYSTEM, PLANTING AND ARCHITECTURAL FEATURES. LOCATE TURF AREA REMOTE CONTROL VALVE(S) IN SHRUB PLANTING AREAS - DO NOT LOCATE IN TURF AREAS OR BIOSWALE/BIORETENTION AREAS.

2. CONTRACTOR SHALL PERFORM PRESSURE TESTS (STATIC & DYNAMIC) AND FLOW TESTS (GPM) AT POINT OF CONNECTION (P.O.C.) PRIOR TO BEGINNING WORK. SEE IRRIGATION NOTES FOR PRESSURE AND FLOW TEST REQUIREMENTS AND PROCEDURES. CONTRACTOR SHALL BE RESPONSIBLE FOR ANY CORRECTIVE MEASURES REQUIRED TO IRRIGATION SYSTEM, AT NO ADDITIONAL COST TO THE OWNER, IF IRRIGATION SYSTEM IS INSTALLED WITHOUT REQUIRED TESTS, AND DISCREPANCIES IN PRESSURE AND FLOW AT THE P.O.C. ARE DISCOVERED THAT PREVENT THE IRRIGATION SYSTEM FROM FUNCTIONING CORRECTLY.

WATER PRESSURE AT P.O.C. NOTES:

1. CONTRACTOR SHALL VERIFY WATER PRESSURE ON SITE. IF PRESSURE IS 65 PSI OR HIGHER AT P.O.C., CONTRACTOR SHALL INSTALL A PRESSURE REDUCER AS SHOWN, AND SET PRESSURE REDUCER TO 65 PSI. PRESSURE REDUCER SHALL BE WILKINS LEAD FREE 500XL-YSBR (INCLUDES PRESSURE REDUCER & FILTER), LINE SIZE, SEE IRRIGATION DETAILS.

2. IF PRESSURE IS LESS THAN 65 PSI OMIT PRESSURE REDUCER.

3. IF PRESSURE IS LESS THAN 55 PSI NOTIFY OWNER'S REPRESENTATIVE AND LANDSCAPE ARCHITECT FOR CORRECTIVE MEASURES.

SLEEVE NOTES:

1. FOR DESIGN CLARITY, NOT ALL SLEEVES SHOWN. CONTRACTOR SHALL SLEEVE ALL PIPES CROSSING UNDER PAVED AREAS.

2. WHERE LATERAL LINES WITH SLEEVES CROSS ROADS OR DRIVEWAYS, CONTRACTOR SHALL INSTALL ONE SPARE 4" CLASS 315 PVC SLEEVE.

3. WHERE MAIN LINES WITH SLEEVES CROSS ROADS OR DRIVEWAYS, CONTRACTOR SHALL INSTALL ONE SPARE 6" CLASS 315 PVC SLEEVE.

SLOPE AREA DRIP CIRCUIT WATER PRESSURE NOTES:

1. CONTRACTOR SHALL VERIFY PRESSURE IN LATERAL LINES ON SLOPE AREAS - WHERE PRESSURE EXCEEDS 50 PSI, CONTRACTOR SHALL INSTALL A PRESSURE REDUCER AND SET PRESSURE REDUCER TO 35 PSI. PRESSURE REDUCER SHALL BE WILKINS LEAD FREE 500XL-YSBR (INCLUDES PRESSURE REDUCER & FILTER; OR APPROVED EQUIVALENT), LINE SIZE, SEE IRRIGATION DETAILS.

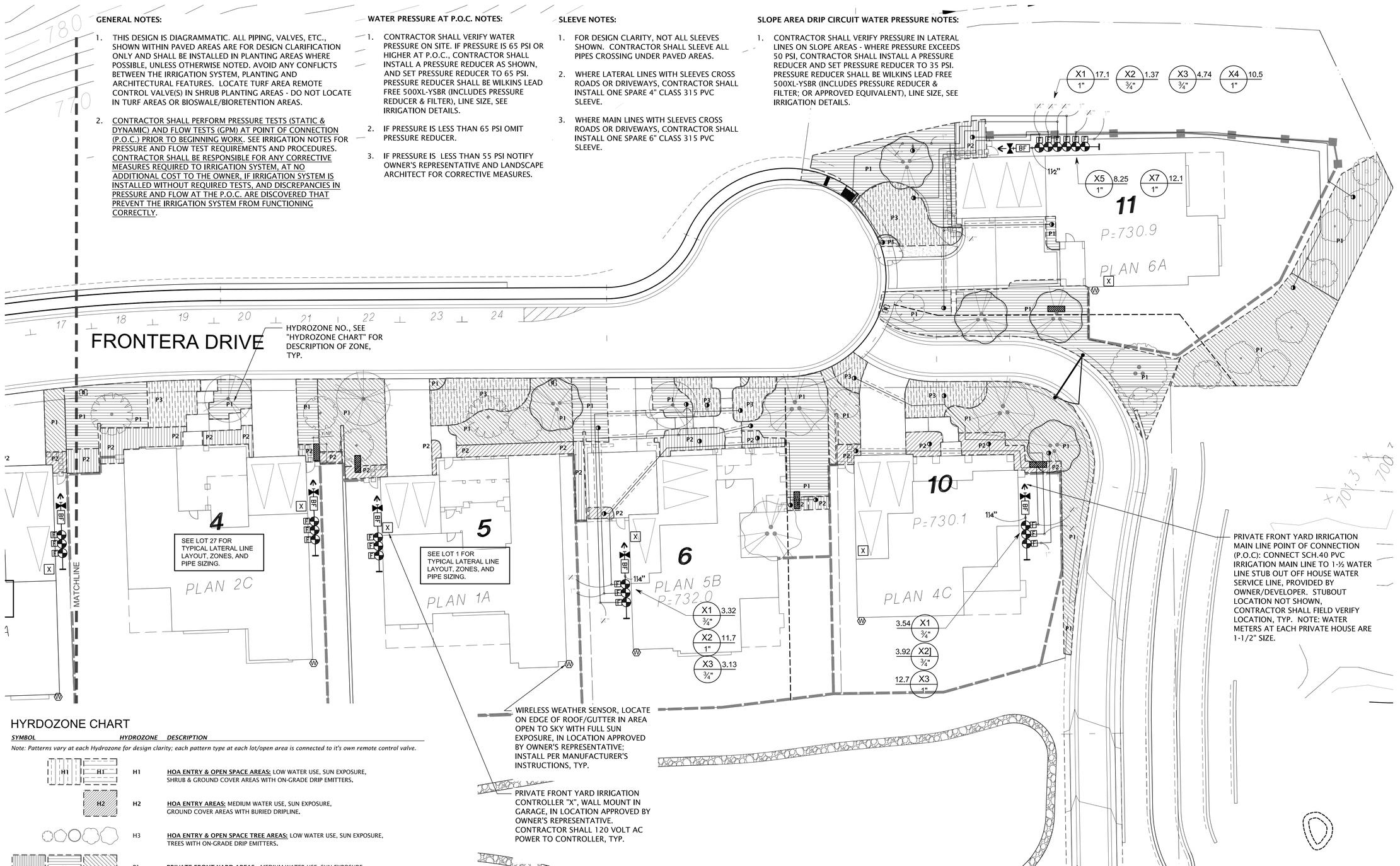

HYRDOZONE CHART

SYMBOL	HYDROZONE	DESCRIPTION
H1	H1	**HOA ENTRY & OPEN SPACE AREAS:** LOW WATER USE, SUN EXPOSURE, SHRUB & GROUND COVER AREAS WITH ON-GRADE DRIP EMITTERS.
H2	H2	**HOA ENTRY AREAS:** MEDIUM WATER USE, SUN EXPOSURE, GROUND COVER AREAS WITH BURIED DRIPLINE.
H3	H3	**HOA ENTRY & OPEN SPACE TREE AREAS:** LOW WATER USE, SUN EXPOSURE, TREES WITH ON-GRADE DRIP EMITTERS.
P1	P1	**PRIVATE FRONT YARD AREAS:** MEDIUM WATER USE, SUN EXPOSURE, TREE, SHRUB & GROUND COVER AREAS WITH BURIED DRIPLINE.
P2	P2	**PRIVATE FRONT YARD AREAS:** MEDIUM WATER USE, PARTIAL SHADE EXPOSURE, TREE, SHRUB & GROUND COVER AREAS WITH BURIED DRIPLINE.
P3	P3	**PRIVATE FRONT YARD AREAS:** HIGH WATER USE, SUN EXPOSURE, TURF AREAS WITH BURIED DRIPLINE.

Note: Patterns vary at each Hydrozone for design clarity; each pattern type at each lot/open area is connected to it's own remote control valve.

NOTE: CONTRACTOR SHALL FIELD STAKE ALL TREE LOCATIONS PRIOR TO INSTALLATION OF IRRIGATION SYSTEM TO AVOID CONFLICTS WITH TREE LOCATIONS AND MAIN LINES/LATERAL LINES. IRRIGATION LATERAL LINES AND MAIN LINES SHALL BE LOCATED 3' MINIMUM HORIZONTALLY FROM TREE LOCATIONS. FIELD ADJUST ROUTING OF IRRIGATION LINES AS NECESSARY TO MEET MINIMUM CLEARANCE NOTED ABOVE.

0 8 16 32 64

CLIENT:
SUMMERHILL HOMES
777 SOUTH CALIFORNIA AVE.
PALO ALTO
CA
94304
TEL 650.842.2421

USA 811 BEFORE YOU DIG
800.227.2600

LICENSED LANDSCAPE ARCHITECT
JERI R. ABED
Lic. No. 3402
Expires
STATE OF CALIFORNIA

VAN DORN ABED
LANDSCAPE ARCHITECTS, INC.
81 14TH ST. SAN FRANCISCO, CA
ZIP 94103 PH (415) 864-1921 FAX(415) 864-6796

COPYRIGHT © 2006 VAN DORN ABED LANDSCAPE ARCHITECTS, INC.
ALL DRAWINGS & WRITTEN MATERIAL APPEARING HEREIN CONSTITUTE ORIGINAL WORK OF THE ARCHITECT & SAME MAY NOT BE DUPLICATED, USED OR DISCLOSED WITHOUT WRITTEN CONSENT OF THE LANDSCAPE ARCHITECT.

PROJECT MANAGER: MW
DRAWN BY: EO
CHECKED BY:

PROJECT NAME/LOCATION:
RANCHO LAGUNA
MORAGA, CA.

DRAWING TITLE:
LANDSCAPE CONSTRUCTION DRAWINGS

REVISIONS:

NO.	DESCRIPTION	BY:	DATE

SHEET TITLE:
IRRIGATION PLAN

SCALE: 1/16" = 1'-0"
ISSUE DATE: 02/27/15
PROJECT NO.: V1226
SHEET NO.: L4.2
29 OF 44

GENERAL NOTES:

1. THIS DESIGN IS DIAGRAMMATIC. ALL PIPING, VALVES, ETC., SHOWN WITHIN PAVED AREAS ARE FOR DESIGN CLARIFICATION ONLY AND SHALL BE INSTALLED IN PLANTING AREAS WHERE POSSIBLE, UNLESS OTHERWISE NOTED. AVOID ANY CONFLICTS BETWEEN THE IRRIGATION SYSTEM, PLANTING AND ARCHITECTURAL FEATURES. LOCATE TURF AREA REMOTE CONTROL VALVE(S) IN SHRUB PLANTING AREAS - DO NOT LOCATE IN TURF AREAS OR BIOSWALE/BIORETENTION AREAS.

2. CONTRACTOR SHALL PERFORM PRESSURE TESTS (STATIC & DYNAMIC) AND FLOW TESTS (GPM) AT POINT OF CONNECTION (P.O.C.) PRIOR TO BEGINNING WORK. SEE IRRIGATION NOTES FOR PRESSURE AND FLOW TEST REQUIREMENTS AND PROCEDURES. CONTRACTOR SHALL BE RESPONSIBLE FOR ANY CORRECTIVE MEASURES REQUIRED TO IRRIGATION SYSTEM, AT NO ADDITIONAL COST TO THE OWNER, IF IRRIGATION SYSTEM IS INSTALLED WITHOUT REQUIRED TESTS, AND DISCREPANCIES IN PRESSURE AND FLOW AT THE P.O.C. ARE DISCOVERED THAT PREVENT THE IRRIGATION SYSTEM FROM FUNCTIONING CORRECTLY.

WATER PRESSURE AT P.O.C. NOTES:

1. CONTRACTOR SHALL VERIFY WATER PRESSURE ON SITE. IF PRESSURE IS 65 PSI OR HIGHER AT P.O.C., CONTRACTOR SHALL INSTALL A PRESSURE REDUCER AS SHOWN, AND SET PRESSURE REDUCER TO 65 PSI. PRESSURE REDUCER SHALL BE WILKINS LEAD FREE 500XL-YSBR (INCLUDES PRESSURE REDUCER & FILTER), LINE SIZE, SEE IRRIGATION DETAILS.
2. IF PRESSURE IS LESS THAN 65 PSI OMIT PRESSURE REDUCER.
3. IF PRESSURE IS LESS THAN 55 PSI NOTIFY OWNER'S REPRESENTATIVE AND LANDSCAPE ARCHITECT FOR CORRECTIVE MEASURES.

SLEEVE NOTES:

1. FOR DESIGN CLARITY, NOT ALL SLEEVES SHOWN. CONTRACTOR SHALL SLEEVE ALL PIPES CROSSING UNDER PAVED AREAS.
2. WHERE LATERAL LINES WITH SLEEVES CROSS ROADS OR DRIVEWAYS, CONTRACTOR SHALL INSTALL ONE SPARE 4" CLASS 315 PVC SLEEVE.
3. WHERE MAIN LINES WITH SLEEVES CROSS ROADS OR DRIVEWAYS, CONTRACTOR SHALL INSTALL ONE SPARE 6" CLASS 315 PVC SLEEVE.

SLOPE AREA DRIP CIRCUIT WATER PRESSURE NOTES:

1. CONTRACTOR SHALL VERIFY PRESSURE IN LATERAL LINES ON SLOPE AREAS - WHERE PRESSURE EXCEEDS 50 PSI, CONTRACTOR SHALL INSTALL A PRESSURE REDUCER AND SET PRESSURE REDUCER TO 35 PSI. PRESSURE REDUCER SHALL BE WILKINS LEAD FREE 500XL-YSBR (INCLUDES PRESSURE REDUCER & FILTER; OR APPROVED EQUIVALENT), LINE SIZE, SEE IRRIGATION DETAILS.

HYRDOZONE CHART

SYMBOL	HYDROZONE	DESCRIPTION
H1	H1	**HOA ENTRY & OPEN SPACE AREAS:** LOW WATER USE, SUN EXPOSURE, SHRUB & GROUND COVER AREAS WITH ON-GRADE DRIP EMITTERS.
H2	H2	**HOA ENTRY AREAS:** MEDIUM WATER USE, SUN EXPOSURE, GROUND COVER AREAS WITH BURIED DRIPLINE.
H3	H3	**HOA ENTRY & OPEN SPACE TREE AREAS:** LOW WATER USE, SUN EXPOSURE, TREES WITH ON-GRADE DRIP EMITTERS.
P1	P1	**PRIVATE FRONT YARD AREAS:** MEDIUM WATER USE, SUN EXPOSURE, TREE, SHRUB & GROUND COVER AREAS WITH BURIED DRIPLINE.
P2	P2	**PRIVATE FRONT YARD AREAS:** MEDIUM WATER USE, PARTIAL SHADE EXPOSURE, TREE, SHRUB & GROUND COVER AREAS WITH BURIED DRIPLINE.
P3	P3	**PRIVATE FRONT YARD AREAS:** HIGH WATER USE, SUN EXPOSURE, TURF AREAS WITH BURIED DRIPLINE.

Note: Patterns vary at each Hydrozone for design clarity; each pattern type at each lot/open area is connected to it's own remote control valve.

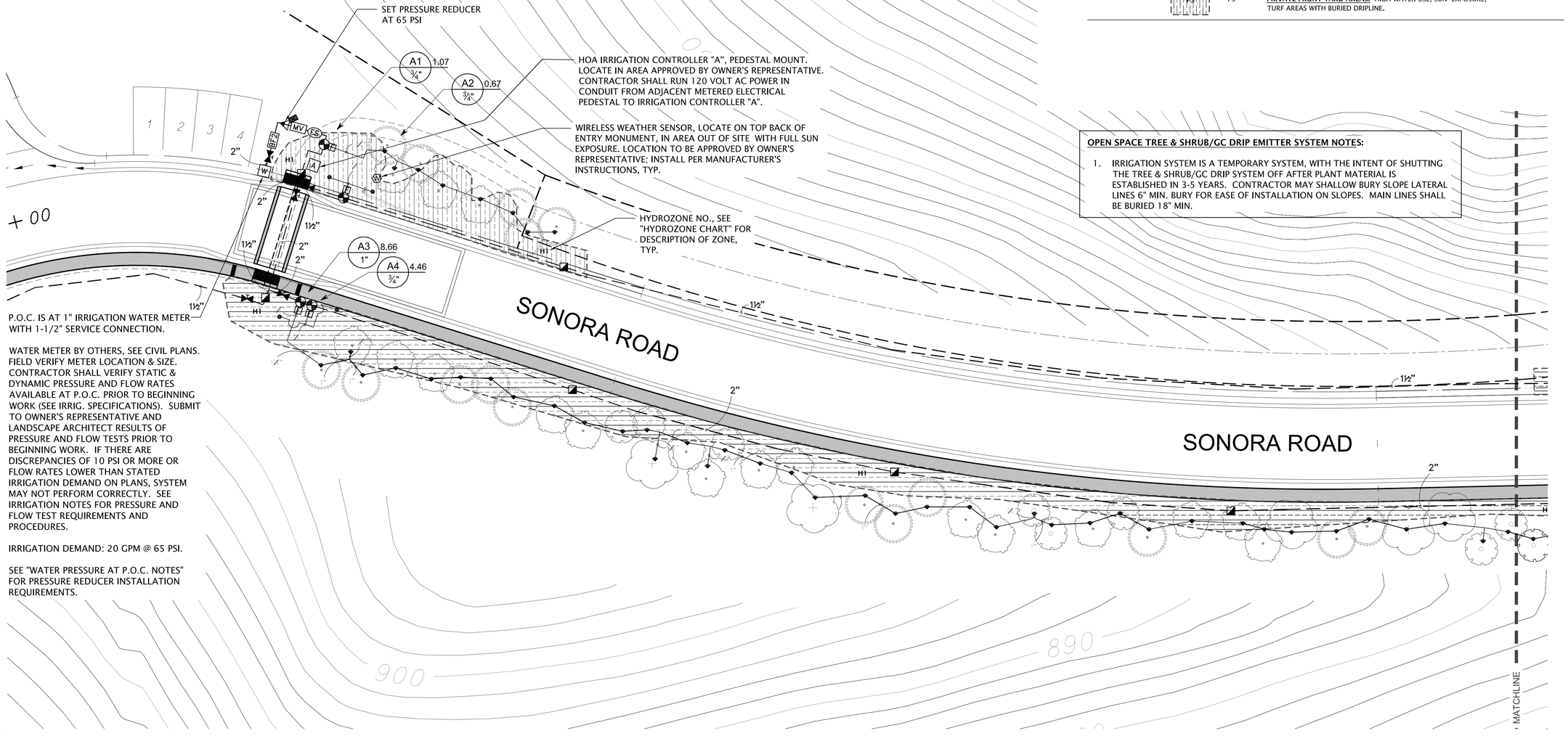

P.O.C. IS AT 1" IRRIGATION WATER METER WITH 1-1/2" SERVICE CONNECTION.

WATER METER BY OTHERS, SEE CIVIL PLANS. FIELD VERIFY METER LOCATION & SIZE. CONTRACTOR SHALL VERIFY STATIC & DYNAMIC PRESSURE AND FLOW RATES AVAILABLE AT P.O.C. PRIOR TO BEGINNING WORK (SEE IRRIG. SPECIFICATIONS). SUBMIT TO OWNER'S REPRESENTATIVE AND LANDSCAPE ARCHITECT RESULTS OF PRESSURE AND FLOW TESTS PRIOR TO BEGINNING WORK. IF THERE ARE DISCREPANCIES OF 10 PSI OR MORE OR FLOW RATES LOWER THAN STATED IRRIGATION DEMAND ON PLANS, SYSTEM MAY NOT PERFORM CORRECTLY. SEE IRRIGATION NOTES FOR PRESSURE AND FLOW TEST REQUIREMENTS AND PROCEDURES.

IRRIGATION DEMAND: 20 GPM @ 65 PSI.

SEE "WATER PRESSURE AT P.O.C. NOTES" FOR PRESSURE REDUCER INSTALLATION REQUIREMENTS.

OPEN SPACE TREE & SHRUB/GC DRIP EMITTER SYSTEM NOTES:

1. IRRIGATION SYSTEM IS A TEMPORARY SYSTEM, WITH THE INTENT OF SHUTTING THE TREE & SHRUB/GC DRIP SYSTEM OFF AFTER PLANT MATERIAL IS ESTABLISHED IN 3-5 YEARS. CONTRACTOR MAY SHALLOW BURY SLOPE LATERAL LINES 6" MIN. BURY FOR EASE OF INSTALLATION ON SLOPES. MAIN LINES SHALL BE BURIED 18" MIN.

NOTE: CONTRACTOR SHALL FIELD STAKE ALL TREE LOCATIONS PRIOR TO INSTALLATION OF IRRIGATION SYSTEM TO AVOID CONFLICTS WITH TREE LOCATIONS AND MAIN LINES/LATERAL LINES. IRRIGATION LATERAL LINES AND MAIN LINES SHALL BE LOCATED 3' MINIMUM HORIZONTALLY FROM TREE LOCATIONS. FIELD ADJUST ROUTING OF IRRIGATION LINES AS NECESSARY TO MEET MINIMUM CLEARANCE NOTED ABOVE.

0 8 16 32 64

CLIENT:
SUMMERHILL HOMES
777 SOUTH CALIFORNIA AVE.
PALO ALTO
CA
94304
TEL 650.842.2421

USA 811 CALL BEFORE YOU DIG
800.227.2600

LICENSED LANDSCAPE ARCHITECT
JERY R. ABED
Lic. No. 3402
Expires
STATE OF CALIFORNIA

VAN DORN ABED
LANDSCAPE ARCHITECTS, INC.
81 14TH ST. SAN FRANCISCO, CA
ZIP 94103 PH (415) 864-1921 FAX(415) 864-6796

COPYRIGHT © 2015 VAN DORN ABED LANDSCAPE ARCHITECTS, INC.
ALL DRAWINGS & WRITTEN MATERIAL APPEARING HEREIN CONSTITUTE ORIGINAL WORK OF THE ARCHITECT & SAME MAY NOT BE DUPLICATED, USED OR DISCLOSED WITHOUT WRITTEN CONSENT OF THE LANDSCAPE ARCHITECT.

PROJECT MANAGER: MW
DRAWN BY: EO
CHECKED BY:

PROJECT NAME/LOCATION:
RANCHO LAGUNA
MORAGA CA.

DRAWING TITLE:
LANDSCAPE CONSTRUCTION DRAWINGS

REVISIONS: NO.	DESCRIPTION	BY:	DATE

SHEET TITLE:
IRRIGATION PLAN

SCALE: 1/16" = 1'-0"
ISSUE DATE: 02/27/15
PROJECT NO.: V1226
SHEET NO.: L4.3
30 OF 44

GENERAL NOTES:

1. THIS DESIGN IS DIAGRAMMATIC. ALL PIPING, VALVES, ETC., SHOWN WITHIN PAVED AREAS ARE FOR DESIGN CLARIFICATION ONLY AND SHALL BE INSTALLED IN PLANTING AREAS WHERE POSSIBLE, UNLESS OTHERWISE NOTED. AVOID ANY CONFLICTS BETWEEN THE IRRIGATION SYSTEM, PLANTING AND ARCHITECTURAL FEATURES. LOCATE TURF AREA REMOTE CONTROL VALVE(S) IN SHRUB PLANTING AREAS - DO NOT LOCATE IN TURF AREAS OR BIOSWALE/BIORETENTION AREAS.

2. CONTRACTOR SHALL PERFORM PRESSURE TESTS (STATIC & DYNAMIC) AND FLOW TESTS (GPM) AT POINT OF CONNECTION (P.O.C.) PRIOR TO BEGINNING WORK. SEE IRRIGATION NOTES FOR PRESSURE AND FLOW TEST REQUIREMENTS AND PROCEDURES. CONTRACTOR SHALL BE RESPONSIBLE FOR ANY CORRECTIVE MEASURES REQUIRED TO IRRIGATION SYSTEM, AT NO ADDITIONAL COST TO THE OWNER, IF IRRIGATION SYSTEM IS INSTALLED WITHOUT REQUIRED TESTS, AND DISCREPANCIES IN PRESSURE AND FLOW AT THE P.O.C. ARE DISCOVERED THAT PREVENT THE IRRIGATION SYSTEM FROM FUNCTIONING CORRECTLY.

WATER PRESSURE AT P.O.C. NOTES:

1. CONTRACTOR SHALL VERIFY WATER PRESSURE ON SITE. IF PRESSURE IS 65 PSI OR HIGHER AT P.O.C., CONTRACTOR SHALL INSTALL A PRESSURE REDUCER AS SHOWN, AND SET PRESSURE REDUCER TO 65 PSI. PRESSURE REDUCER SHALL BE WILKINS LEAD FREE 500XL-YSBR (INCLUDES PRESSURE REDUCER & FILTER), LINE SIZE, SEE IRRIGATION DETAILS.

2. IF PRESSURE IS LESS THAN 65 PSI OMIT PRESSURE REDUCER.

3. IF PRESSURE IS LESS THAN 55 PSI NOTIFY OWNER'S REPRESENTATIVE AND LANDSCAPE ARCHITECT FOR CORRECTIVE MEASURES.

SLEEVE NOTES:

1. FOR DESIGN CLARITY, NOT ALL SLEEVES SHOWN. CONTRACTOR SHALL SLEEVE ALL PIPES CROSSING UNDER PAVED AREAS.

2. WHERE LATERAL LINES WITH SLEEVES CROSS ROADS OR DRIVEWAYS, CONTRACTOR SHALL INSTALL ONE SPARE 4" CLASS 315 PVC SLEEVE.

3. WHERE MAIN LINES WITH SLEEVES CROSS ROADS OR DRIVEWAYS, CONTRACTOR SHALL INSTALL ONE SPARE 6" CLASS 315 PVC SLEEVE.

SLOPE AREA DRIP CIRCUIT WATER PRESSURE NOTES:

1. CONTRACTOR SHALL VERIFY PRESSURE IN LATERAL LINES ON SLOPE AREAS - WHERE PRESSURE EXCEEDS 50 PSI, CONTRACTOR SHALL INSTALL A PRESSURE REDUCER AND SET PRESSURE REDUCER TO 35 PSI. PRESSURE REDUCER SHALL BE WILKINS LEAD FREE 500XL-YSBR (INCLUDES PRESSURE REDUCER & FILTER; OR APPROVED EQUIVALENT), LINE SIZE, SEE IRRIGATION DETAILS.

OPEN SPACE TREE & SHRUB/GC DRIP EMITTER SYSTEM NOTES:

1. IRRIGATION SYSTEM IS A TEMPORARY SYSTEM, WITH THE INTENT OF SHUTTING THE TREE & SHRUB/GC DRIP SYSTEM OFF AFTER PLANT MATERIAL IS ESTABLISHED IN 3-5 YEARS. CONTRACTOR MAY SHALLOW BURY SLOPE LATERAL LINES 6" MIN. BURY FOR EASE OF INSTALLATION ON SLOPES. MAIN LINES SHALL BE BURIED 18" MIN.

HYRDOZONE CHART

SYMBOL	HYDROZONE	DESCRIPTION
H1 H1 H1	H1	**HOA ENTRY & OPEN SPACE AREAS:** LOW WATER USE, SUN EXPOSURE, SHRUB & GROUND COVER AREAS WITH ON-GRADE DRIP EMITTERS.
H2	H2	**HOA ENTRY AREAS:** MEDIUM WATER USE, SUN EXPOSURE, GROUND COVER AREAS WITH BURIED DRIPLINE.
	H3	**HOA ENTRY & OPEN SPACE TREE AREAS:** LOW WATER USE, SUN EXPOSURE, TREES WITH ON-GRADE DRIP EMITTERS.
P1 P1 P1	P1	**PRIVATE FRONT YARD AREAS:** MEDIUM WATER USE, SUN EXPOSURE, TREE, SHRUB & GROUND COVER AREAS WITH BURIED DRIPLINE.
P2 P2 P2	P2	**PRIVATE FRONT YARD AREAS:** MEDIUM WATER USE, PARTIAL SHADE EXPOSURE, TREE, SHRUB & GROUND COVER AREAS WITH BURIED DRIPLINE.
P3	P3	**PRIVATE FRONT YARD AREAS:** HIGH WATER USE, SUN EXPOSURE, TURF AREAS WITH BURIED DRIPLINE.

Note: Patterns vary at each Hydrozone for design clarity; each pattern type at each lot/open area is connected to it's own remote control valve.

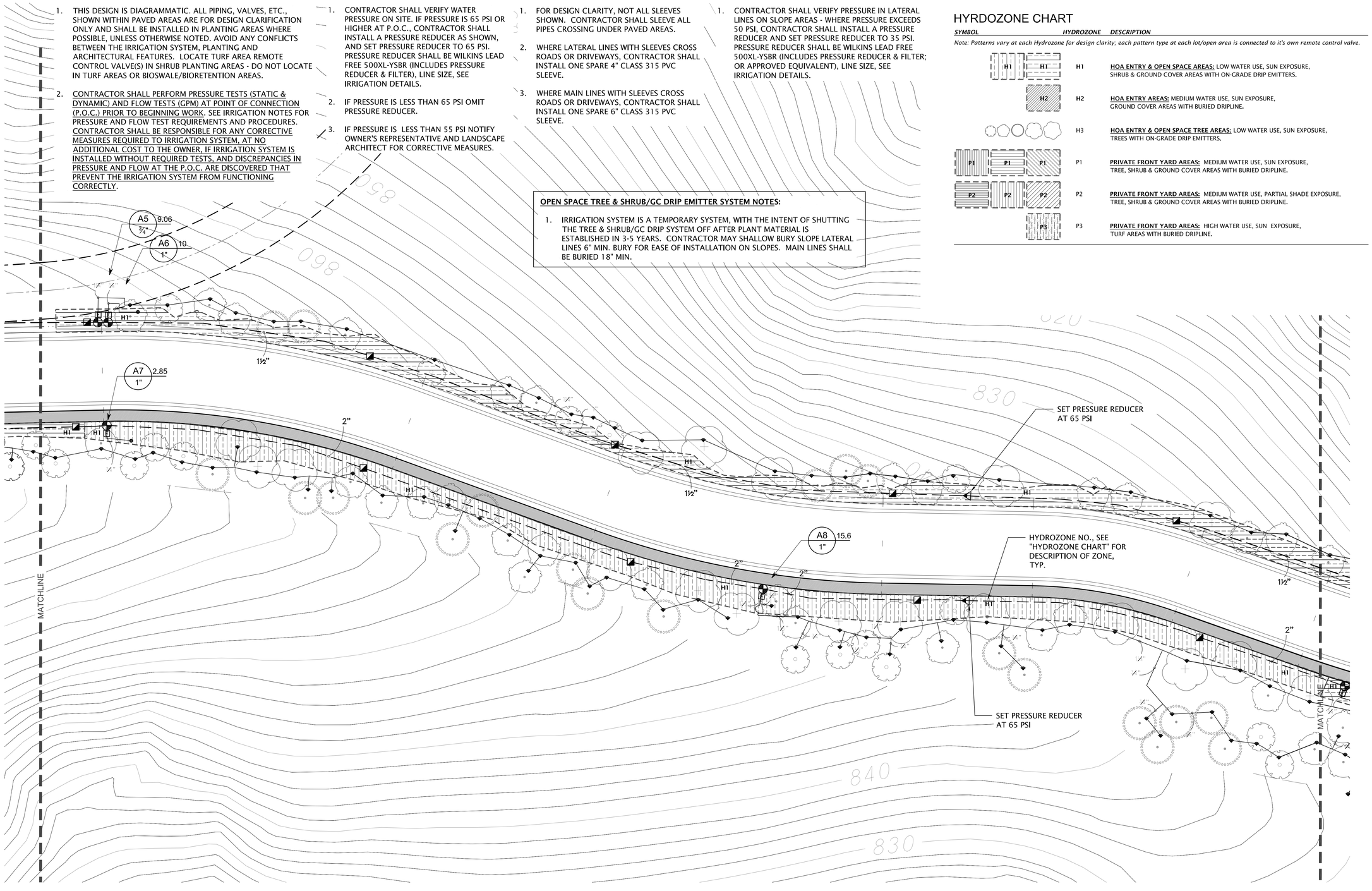

NOTE: CONTRACTOR SHALL FIELD STAKE ALL TREE LOCATIONS PRIOR TO INSTALLATION OF IRRIGATION SYSTEM TO AVOID CONFLICTS WITH TREE LOCATIONS AND MAIN LINES/LATERAL LINES. IRRIGATION LATERAL LINES AND MAIN LINES SHALL BE LOCATED 3' MINIMUM HORIZONTALLY FROM TREE LOCATIONS. FIELD ADJUST ROUTING OF IRRIGATION LINES AS NECESSARY TO MEET MINIMUM CLEARANCE NOTED ABOVE.

0 8 16 32 64

CLIENT:
SUMMERHILL HOMES
777 SOUTH CALIFORNIA AVE.
PALO ALTO
CA
94304
TEL 650.842.2421

CALL BEFORE YOU DIG
811
800.227.2600

LICENSED LANDSCAPE ARCHITECT
JERY R. ABED
Lic. No. 3402
Expires
STATE OF CALIFORNIA

VAN DORN ABED
LANDSCAPE ARCHITECTS, INC.
81 14TH ST. SAN FRANCISCO, CA
ZIP 94103 PH (415) 864-1921 FAX(415) 864-6796

COPYRIGHT © 2005 VAN DORN ABED LANDSCAPE ARCHITECTS, INC.
ALL DRAWINGS & WRITTEN MATERIAL APPEARING HEREIN CONSTITUTE ORIGINAL WORK OF THE ARCHITECT & SAME MAY NOT BE DUPLICATED, USED OR DISCLOSED WITHOUT WRITTEN CONSENT OF THE LANDSCAPE ARCHITECT.

PROJECT MANAGER: MW
DRAWN BY: EO
CHECKED BY:

PROJECT NAME/LOCATION:
RANCHO LAGUNA
MORAGA, CA.

DRAWING TITLE:
LANDSCAPE CONSTRUCTION DRAWINGS

REVISIONS: NO.	DESCRIPTION:	BY:	DATE

SHEET TITLE:
IRRIGATION PLAN

SCALE: 1/16" = 1'-0"
ISSUE DATE: 02/27/15
PROJECT NO.: V1226
SHEET NO.: L4.4
31 OF 44

GENERAL NOTES:

1. THIS DESIGN IS DIAGRAMMATIC. ALL PIPING, VALVES, ETC., SHOWN WITHIN PAVED AREAS ARE FOR DESIGN CLARIFICATION ONLY AND SHALL BE INSTALLED IN PLANTING AREAS WHERE POSSIBLE, UNLESS OTHERWISE NOTED. AVOID ANY CONFLICTS BETWEEN THE IRRIGATION SYSTEM, PLANTING AND ARCHITECTURAL FEATURES. LOCATE TURF AREA REMOTE CONTROL VALVE(S) IN SHRUB PLANTING AREAS - DO NOT LOCATE IN TURF AREAS OR BIOSWALE/BIORETENTION AREAS.

2. CONTRACTOR SHALL PERFORM PRESSURE TESTS (STATIC & DYNAMIC) AND FLOW TESTS (GPM) AT POINT OF CONNECTION (P.O.C.) PRIOR TO BEGINNING WORK. SEE IRRIGATION NOTES FOR PRESSURE AND FLOW TEST REQUIREMENTS AND PROCEDURES. CONTRACTOR SHALL BE RESPONSIBLE FOR ANY CORRECTIVE MEASURES REQUIRED TO IRRIGATION SYSTEM, AT NO ADDITIONAL COST TO THE OWNER, IF IRRIGATION SYSTEM IS INSTALLED WITHOUT REQUIRED TESTS, AND DISCREPANCIES IN PRESSURE AND FLOW AT THE P.O.C. ARE DISCOVERED THAT PREVENT THE IRRIGATION SYSTEM FROM FUNCTIONING CORRECTLY.

WATER PRESSURE AT P.O.C. NOTES:

1. CONTRACTOR SHALL VERIFY WATER PRESSURE ON SITE. IF PRESSURE IS 65 PSI OR HIGHER AT P.O.C., CONTRACTOR SHALL INSTALL A PRESSURE REDUCER AS SHOWN, AND SET PRESSURE REDUCER TO 65 PSI. PRESSURE REDUCER SHALL BE WILKINS LEAD FREE 500XL-YSBR (INCLUDES PRESSURE REDUCER & FILTER), LINE SIZE, SEE IRRIGATION DETAILS.

2. IF PRESSURE IS LESS THAN 65 PSI OMIT PRESSURE REDUCER.

3. IF PRESSURE IS LESS THAN 55 PSI NOTIFY OWNER'S REPRESENTATIVE AND LANDSCAPE ARCHITECT FOR CORRECTIVE MEASURES.

SLEEVE NOTES:

1. FOR DESIGN CLARITY, NOT ALL SLEEVES SHOWN. CONTRACTOR SHALL SLEEVE ALL PIPES CROSSING UNDER PAVED AREAS.

2. WHERE LATERAL LINES WITH SLEEVES CROSS ROADS OR DRIVEWAYS, CONTRACTOR SHALL INSTALL ONE SPARE 4" CLASS 315 PVC SLEEVE.

3. WHERE MAIN LINES WITH SLEEVES CROSS ROADS OR DRIVEWAYS, CONTRACTOR SHALL INSTALL ONE SPARE 6" CLASS 315 PVC SLEEVE.

SLOPE AREA DRIP CIRCUIT WATER PRESSURE NOTES:

1. CONTRACTOR SHALL VERIFY PRESSURE IN LATERAL LINES ON SLOPE AREAS - WHERE PRESSURE EXCEEDS 50 PSI, CONTRACTOR SHALL INSTALL A PRESSURE REDUCER AND SET PRESSURE REDUCER TO 35 PSI. PRESSURE REDUCER SHALL BE WILKINS LEAD FREE 500XL-YSBR (INCLUDES PRESSURE REDUCER & FILTER; OR APPROVED EQUIVALENT), LINE SIZE, SEE IRRIGATION DETAILS.

HYRDOZONE CHART

SYMBOL	HYDROZONE	DESCRIPTION
H1	H1	HOA ENTRY & OPEN SPACE AREAS: LOW WATER USE, SUN EXPOSURE, SHRUB & GROUND COVER AREAS WITH ON-GRADE DRIP EMITTERS.
H2	H2	HOA ENTRY AREAS: MEDIUM WATER USE, SUN EXPOSURE, GROUND COVER AREAS WITH BURIED DRIPLINE.
H3	H3	HOA ENTRY & OPEN SPACE TREE AREAS: LOW WATER USE, SUN EXPOSURE, TREES WITH ON-GRADE DRIP EMITTERS.
P1	P1	PRIVATE FRONT YARD AREAS: MEDIUM WATER USE, SUN EXPOSURE, TREE, SHRUB & GROUND COVER AREAS WITH BURIED DRIPLINE.
P2	P2	PRIVATE FRONT YARD AREAS: MEDIUM WATER USE, PARTIAL SHADE EXPOSURE, TREE, SHRUB & GROUND COVER AREAS WITH BURIED DRIPLINE.
P3	P3	PRIVATE FRONT YARD AREAS: HIGH WATER USE, SUN EXPOSURE, TURF AREAS WITH BURIED DRIPLINE.

Note: Patterns vary at each Hydrozone for design clarity; each pattern type at each lot/open area is connected to it's own remote control valve.

OPEN SPACE TREE & SHRUB/GC DRIP EMITTER SYSTEM NOTES:

1. IRRIGATION SYSTEM IS A TEMPORARY SYSTEM, WITH THE INTENT OF SHUTTING THE TREE & SHRUB/GC DRIP SYSTEM OFF AFTER PLANT MATERIAL IS ESTABLISHED IN 3-5 YEARS. CONTRACTOR MAY SHALLOW BURY SLOPE LATERAL LINES 6" MIN. BURY FOR EASE OF INSTALLATION ON SLOPES. MAIN LINES SHALL BE BURIED 18" MIN.

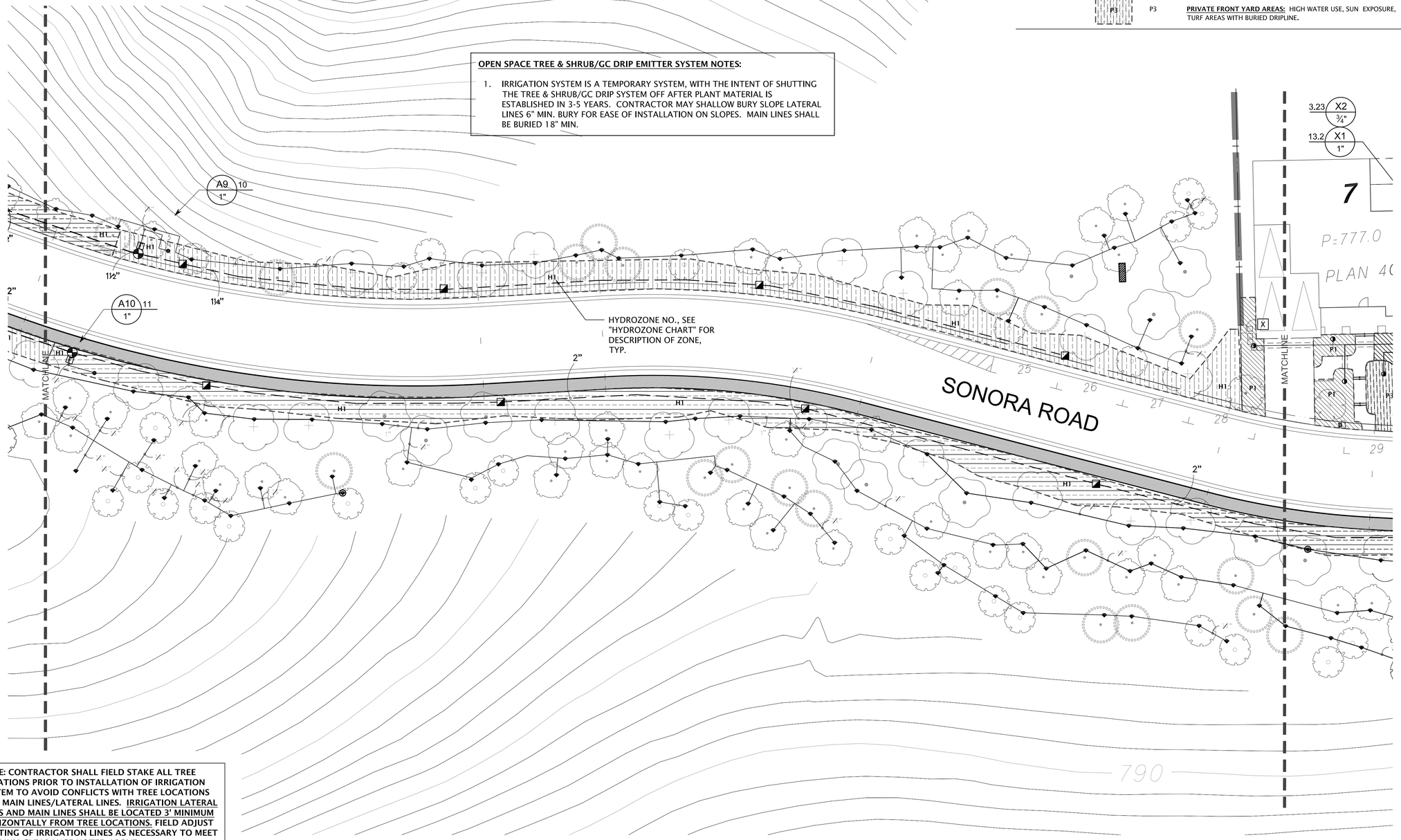

NOTE: CONTRACTOR SHALL FIELD STAKE ALL TREE LOCATIONS PRIOR TO INSTALLATION OF IRRIGATION SYSTEM TO AVOID CONFLICTS WITH TREE LOCATIONS AND MAIN LINES/LATERAL LINES. IRRIGATION LATERAL LINES AND MAIN LINES SHALL BE LOCATED 3' MINIMUM HORIZONTALLY FROM TREE LOCATIONS. FIELD ADJUST ROUTING OF IRRIGATION LINES AS NECESSARY TO MEET MINIMUM CLEARANCE NOTED ABOVE.

CLIENT:
SUMMERHILL HOMES
777 SOUTH CALIFORNIA AVE.
PALO ALTO
CA
94304
TEL 650.842.2421

CALL BEFORE YOU DIG
811
800.227.2600

LICENSED LANDSCAPE ARCHITECT
JERY R. ABED
Lic. No. 3402
Expires
STATE OF CALIFORNIA

VAN DORN ABED
LANDSCAPE ARCHITECTS, INC.
81 14TH ST. SAN FRANCISCO, CA
ZIP 94103 PH (415) 864-1921 FAX(415) 864-6796

COPYRIGHT © 2006 VAN DORN ABED LANDSCAPE ARCHITECTS, INC.
ALL DRAWINGS & WRITTEN MATERIAL APPEARING HEREIN CONSTITUTE ORIGINAL WORK OF THE LANDSCAPE ARCHITECT & SAME MAY NOT BE DUPLICATED, USED OR DISCLOSED WITHOUT WRITTEN CONSENT OF THE LANDSCAPE ARCHITECT.

PROJECT MANAGER: MW
DRAWN BY: EO
CHECKED BY:

PROJECT NAME/LOCATION:
RANCHO LAGUNA
MORAGA CA.

DRAWING TITLE:
LANDSCAPE CONSTRUCTION DRAWINGS

REVISIONS: NO.	DESCRIPTION	BY:	DATE

SHEET TITLE:
IRRIGATION PLAN

SCALE: 1/16" = 1'-0"
ISSUE DATE: 02/27/15
PROJECT NO.: V1226
SHEET NO.: L4.5
32 OF 44

HYRDOZONE CHART

SYMBOL	HYDROZONE	DESCRIPTION
H1 H1	H1	**HOA ENTRY & OPEN SPACE AREAS:** LOW WATER USE, SUN EXPOSURE, SHRUB & GROUND COVER AREAS WITH ON-GRADE DRIP EMITTERS.
H2	H2	**HOA ENTRY AREAS:** MEDIUM WATER USE, SUN EXPOSURE, GROUND COVER AREAS WITH BURIED DRIPLINE.
	H3	**HOA ENTRY & OPEN SPACE TREE AREAS:** LOW WATER USE, SUN EXPOSURE, TREES WITH ON-GRADE DRIP EMITTERS.
P1 P1 P1	P1	**PRIVATE FRONT YARD AREAS:** MEDIUM WATER USE, SUN EXPOSURE, TREE, SHRUB & GROUND COVER AREAS WITH BURIED DRIPLINE.
P2 P2 P2	P2	**PRIVATE FRONT YARD AREAS:** MEDIUM WATER USE, PARTIAL SHADE EXPOSURE, TREE, SHRUB & GROUND COVER AREAS WITH BURIED DRIPLINE.
P3	P3	**PRIVATE FRONT YARD AREAS:** HIGH WATER USE, SUN EXPOSURE, TURF AREAS WITH BURIED DRIPLINE.

Note: Patterns vary at each Hydrozone for design clarity; each pattern type at each lot/open area is connected to it's own remote control valve.

PRIVATE FRONT YARD IRRIGATION CONTROLLER "X", WALL MOUNT IN GARAGE, IN LOCATION APPROVED BY OWNER'S REPRESENTATIVE. CONTRACTOR SHALL 120 VOLT AC POWER TO CONTROLLER, TYP.

PRIVATE FRONT YARD IRRIGATION MAIN LINE POINT OF CONNECTION (P.O.C): CONNECT SCH.40 PVC IRRIGATION MAIN LINE TO 1-½ WATER LINE STUB OUT OFF HOUSE WATER SERVICE LINE, PROVIDED BY OWNER/DEVELOPER. STUBOUT LOCATION NOT SHOWN, CONTRACTOR SHALL FIELD VERIFY LOCATION, TYP. NOTE: WATER METERS AT EACH PRIVATE HOUSE ARE 1-1/2" SIZE.

WIRELESS WEATHER SENSOR, LOCATE ON EDGE OF ROOF/GUTTER IN AREA OPEN TO SKY WITH FULL SUN EXPOSURE, IN LOCATION APPROVED BY OWNER'S REPRESENTATIVE; INSTALL PER MANUFACTURER'S INSTRUCTIONS, TYP.

SEE LOT 7 FOR TYPICAL LATERAL LINE LAYOUT, ZONES, AND PIPE SIZING.

HYDROZONE NO., SEE "HYDROZONE CHART" FOR DESCRIPTION OF ZONE, TYP.

SONORA ROAD

MATCHLINE

SIGHT LINE

OPEN SPACE TREE & SHRUB/GC DRIP EMITTER SYSTEM NOTES:

1. IRRIGATION SYSTEM IS A TEMPORARY SYSTEM, WITH THE INTENT OF SHUTTING THE TREE & SHRUB/GC DRIP SYSTEM OFF AFTER PLANT MATERIAL IS ESTABLISHED IN 3-5 YEARS. CONTRACTOR MAY SHALLOW BURY SLOPE LATERAL LINES 6" MIN. BURY FOR EASE OF INSTALLATION ON SLOPES. MAIN LINES SHALL BE BURIED 18" MIN.

NOTE: CONTRACTOR SHALL FIELD STAKE ALL TREE LOCATIONS PRIOR TO INSTALLATION OF IRRIGATION SYSTEM TO AVOID CONFLICTS WITH TREE LOCATIONS AND MAIN LINES/LATERAL LINES. IRRIGATION LATERAL LINES AND MAIN LINES SHALL BE LOCATED 3' MINIMUM HORIZONTALLY FROM TREE LOCATIONS. FIELD ADJUST ROUTING OF IRRIGATION LINES AS NECESSARY TO MEET MINIMUM CLEARANCE NOTED ABOVE.

GENERAL NOTES:

1. THIS DESIGN IS DIAGRAMMATIC. ALL PIPING, VALVES, ETC., SHOWN WITHIN PAVED AREAS ARE FOR DESIGN CLARIFICATION ONLY AND SHALL BE INSTALLED IN PLANTING AREAS WHERE POSSIBLE, UNLESS OTHERWISE NOTED. AVOID ANY CONFLICTS BETWEEN THE IRRIGATION SYSTEM, PLANTING AND ARCHITECTURAL FEATURES. LOCATE TURF AREA REMOTE CONTROL VALVE(S) IN SHRUB PLANTING AREAS - DO NOT LOCATE IN TURF AREAS OR BIOSWALE/BIORETENTION AREAS.
2. CONTRACTOR SHALL PERFORM PRESSURE TESTS (STATIC & DYNAMIC) AND FLOW TESTS (GPM) AT POINT OF CONNECTION (P.O.C.) PRIOR TO BEGINNING WORK. SEE IRRIGATION NOTES FOR PRESSURE AND FLOW TEST REQUIREMENTS AND PROCEDURES. CONTRACTOR SHALL BE RESPONSIBLE FOR ANY CORRECTIVE MEASURES REQUIRED TO IRRIGATION SYSTEM, AT NO ADDITIONAL COST TO THE OWNER, IF IRRIGATION SYSTEM IS INSTALLED WITHOUT REQUIRED TESTS, AND DISCREPANCIES IN PRESSURE AND FLOW AT THE P.O.C. ARE DISCOVERED THAT PREVENT THE IRRIGATION SYSTEM FROM FUNCTIONING CORRECTLY.

SLOPE AREA DRIP CIRCUIT WATER PRESSURE NOTES:

1. CONTRACTOR SHALL VERIFY PRESSURE IN LATERAL LINES ON SLOPE AREAS - WHERE PRESSURE EXCEEDS 50 PSI, CONTRACTOR SHALL INSTALL A PRESSURE REDUCER AND SET PRESSURE REDUCER TO 35 PSI. PRESSURE REDUCER SHALL BE WILKINS LEAD FREE 500XL-YSBR (INCLUDES PRESSURE REDUCER & FILTER; OR APPROVED EQUIVALENT), LINE SIZE, SEE IRRIGATION DETAILS.

WATER PRESSURE AT P.O.C. NOTES:

1. CONTRACTOR SHALL VERIFY WATER PRESSURE ON SITE. IF PRESSURE IS 65 PSI OR HIGHER AT P.O.C., CONTRACTOR SHALL INSTALL A PRESSURE REDUCER AS SHOWN, AND SET PRESSURE REDUCER TO 65 PSI. PRESSURE REDUCER SHALL BE WILKINS LEAD FREE 500XL-YSBR (INCLUDES PRESSURE REDUCER & FILTER), LINE SIZE, SEE IRRIGATION DETAILS.
2. IF PRESSURE IS LESS THAN 65 PSI OMIT PRESSURE REDUCER.
3. IF PRESSURE IS LESS THAN 55 PSI NOTIFY OWNER'S REPRESENTATIVE AND LANDSCAPE ARCHITECT FOR CORRECTIVE MEASURES.

SLEEVE NOTES:

1. FOR DESIGN CLARITY, NOT ALL SLEEVES SHOWN. CONTRACTOR SHALL SLEEVE ALL PIPES CROSSING UNDER PAVED AREAS.
2. WHERE LATERAL LINES WITH SLEEVES CROSS ROADS OR DRIVEWAYS, CONTRACTOR SHALL INSTALL ONE SPARE 4" CLASS 315 PVC SLEEVE.
3. WHERE MAIN LINES WITH SLEEVES CROSS ROADS OR DRIVEWAYS, CONTRACTOR SHALL INSTALL ONE SPARE 6" CLASS 315 PVC SLEEVE.

0 8 16 32 64

CLIENT:
SUMMERHILL HOMES
777 SOUTH CALIFORNIA AVE.
PALO ALTO
CA
94304
TEL 650.842.2421

CALL BEFORE YOU DIG
811 IT'S FREE! IT'S THE LAW! PLEASE CALL 2 WORKING DAYS BEFORE YOU DIG
800.227.2600

LICENSED LANDSCAPE ARCHITECT
JEFF R. ABED
Lic. No. 3402
Expires
STATE OF CALIFORNIA

VAN DORN ABED
LANDSCAPE ARCHITECTS, INC.
81 14TH ST. SAN FRANCISCO, CA
ZIP 94103 PH (415) 864-9921 FAX(415) 864-6796

PROJECT MANAGER: MW
DRAWN BY: EO
CHECKED BY:

COPYRIGHT © 2015 VAN DORN ABED LANDSCAPE ARCHITECTS, INC.
ALL DRAWINGS & WRITTEN MATERIAL APPEARING HEREIN CONSTITUTE ORIGINAL WORK OF THE ARCHITECT & SAME MAY NOT BE DUPLICATED, USED OR DISCLOSED WITHOUT WRITTEN CONSENT OF THE LANDSCAPE ARCHITECT.

PROJECT NAME/LOCATION:
RANCHO LAGUNA
MORAGA CA.

DRAWING TITLE:
LANDSCAPE CONSTRUCTION DRAWINGS

REVISIONS: NO.	DESCRIPTION	BY:	DATE

SHEET TITLE:
IRRIGATION PLAN

SCALE: 1/16" = 1'-0"
ISSUE DATE: 02/27/15
PROJECT NO.: V1226
SHEET NO.: L4.6
33 of 44

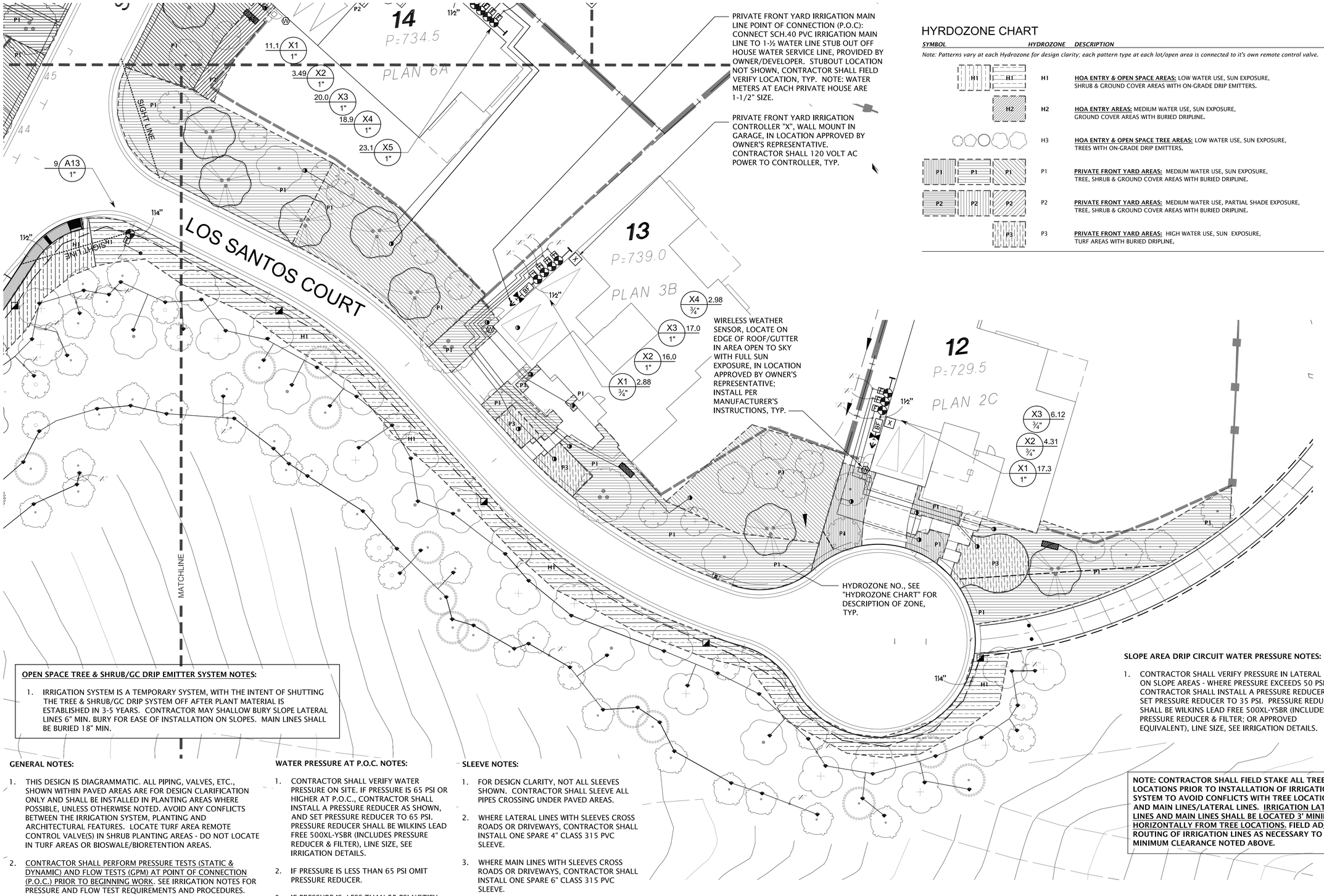

PRIVATE FRONT YARD IRRIGATION MAIN LINE POINT OF CONNECTION (P.O.C): CONNECT SCH.40 PVC IRRIGATION MAIN LINE TO 1-½ WATER LINE STUB OUT OFF HOUSE WATER SERVICE LINE, PROVIDED BY OWNER/DEVELOPER. STUBOUT LOCATION NOT SHOWN, CONTRACTOR SHALL FIELD VERIFY LOCATION, TYP. NOTE: WATER METERS AT EACH PRIVATE HOUSE ARE 1-1/2" SIZE.

PRIVATE FRONT YARD IRRIGATION CONTROLLER "X", WALL MOUNT IN GARAGE, IN LOCATION APPROVED BY OWNER'S REPRESENTATIVE. CONTRACTOR SHALL 120 VOLT AC POWER TO CONTROLLER, TYP.

WIRELESS WEATHER SENSOR, LOCATE ON EDGE OF ROOF/GUTTER IN AREA OPEN TO SKY WITH FULL SUN EXPOSURE, IN LOCATION APPROVED BY OWNER'S REPRESENTATIVE; INSTALL PER MANUFACTURER'S INSTRUCTIONS, TYP.

HYDROZONE NO., SEE "HYDROZONE CHART" FOR DESCRIPTION OF ZONE, TYP.

HYRDOZONE CHART

SYMBOL	HYDROZONE	DESCRIPTION

Note: Patterns vary at each Hydrozone for design clarity; each pattern type at each lot/open area is connected to it's own remote control valve.

H1	H1	**HOA ENTRY & OPEN SPACE AREAS:** LOW WATER USE, SUN EXPOSURE, SHRUB & GROUND COVER AREAS WITH ON-GRADE DRIP EMITTERS.
H2	H2	**HOA ENTRY AREAS:** MEDIUM WATER USE, SUN EXPOSURE, GROUND COVER AREAS WITH BURIED DRIPLINE.
H3	H3	**HOA ENTRY & OPEN SPACE TREE AREAS:** LOW WATER USE, SUN EXPOSURE, TREES WITH ON-GRADE DRIP EMITTERS.
P1	P1	**PRIVATE FRONT YARD AREAS:** MEDIUM WATER USE, SUN EXPOSURE, TREE, SHRUB & GROUND COVER AREAS WITH BURIED DRIPLINE.
P2	P2	**PRIVATE FRONT YARD AREAS:** MEDIUM WATER USE, PARTIAL SHADE EXPOSURE, TREE, SHRUB & GROUND COVER AREAS WITH BURIED DRIPLINE.
P3	P3	**PRIVATE FRONT YARD AREAS:** HIGH WATER USE, SUN EXPOSURE, TURF AREAS WITH BURIED DRIPLINE.

OPEN SPACE TREE & SHRUB/GC DRIP EMITTER SYSTEM NOTES:

1. IRRIGATION SYSTEM IS A TEMPORARY SYSTEM, WITH THE INTENT OF SHUTTING THE TREE & SHRUB/GC DRIP SYSTEM OFF AFTER PLANT MATERIAL IS ESTABLISHED IN 3-5 YEARS. CONTRACTOR MAY SHALLOW BURY SLOPE LATERAL LINES 6" MIN. BURY FOR EASE OF INSTALLATION ON SLOPES. MAIN LINES SHALL BE BURIED 18" MIN.

GENERAL NOTES:

1. THIS DESIGN IS DIAGRAMMATIC. ALL PIPING, VALVES, ETC., SHOWN WITHIN PAVED AREAS ARE FOR DESIGN CLARIFICATION ONLY AND SHALL BE INSTALLED IN PLANTING AREAS WHERE POSSIBLE, UNLESS OTHERWISE NOTED. AVOID ANY CONFLICTS BETWEEN THE IRRIGATION SYSTEM, PLANTING AND ARCHITECTURAL FEATURES. LOCATE TURF AREA REMOTE CONTROL VALVE(S) IN SHRUB PLANTING AREAS - DO NOT LOCATE IN TURF AREAS OR BIOSWALE/BIORETENTION AREAS.
2. CONTRACTOR SHALL PERFORM PRESSURE TESTS (STATIC & DYNAMIC) AND FLOW TESTS (GPM) AT POINT OF CONNECTION (P.O.C.) PRIOR TO BEGINNING WORK. SEE IRRIGATION NOTES FOR PRESSURE AND FLOW TEST REQUIREMENTS AND PROCEDURES. CONTRACTOR SHALL BE RESPONSIBLE FOR ANY CORRECTIVE MEASURES REQUIRED TO IRRIGATION SYSTEM, AT NO ADDITIONAL COST TO THE OWNER, IF IRRIGATION SYSTEM IS INSTALLED WITHOUT REQUIRED TESTS, AND DISCREPANCIES IN PRESSURE AND FLOW AT THE P.O.C. ARE DISCOVERED THAT PREVENT THE IRRIGATION SYSTEM FROM FUNCTIONING CORRECTLY.

WATER PRESSURE AT P.O.C. NOTES:

1. CONTRACTOR SHALL VERIFY WATER PRESSURE ON SITE. IF PRESSURE IS 65 PSI OR HIGHER AT P.O.C., CONTRACTOR SHALL INSTALL A PRESSURE REDUCER AS SHOWN, AND SET PRESSURE REDUCER TO 65 PSI. PRESSURE REDUCER SHALL BE WILKINS LEAD FREE 500XL-YSBR (INCLUDES PRESSURE REDUCER & FILTER), LINE SIZE, SEE IRRIGATION DETAILS.
2. IF PRESSURE IS LESS THAN 65 PSI OMIT PRESSURE REDUCER.
3. IF PRESSURE IS LESS THAN 55 PSI NOTIFY OWNER'S REPRESENTATIVE AND LANDSCAPE ARCHITECT FOR CORRECTIVE MEASURES.

SLEEVE NOTES:

1. FOR DESIGN CLARITY, NOT ALL SLEEVES SHOWN. CONTRACTOR SHALL SLEEVE ALL PIPES CROSSING UNDER PAVED AREAS.
2. WHERE LATERAL LINES WITH SLEEVES CROSS ROADS OR DRIVEWAYS, CONTRACTOR SHALL INSTALL ONE SPARE 4" CLASS 315 PVC SLEEVE.
3. WHERE MAIN LINES WITH SLEEVES CROSS ROADS OR DRIVEWAYS, CONTRACTOR SHALL INSTALL ONE SPARE 6" CLASS 315 PVC SLEEVE.

SLOPE AREA DRIP CIRCUIT WATER PRESSURE NOTES:

1. CONTRACTOR SHALL VERIFY PRESSURE IN LATERAL LINES ON SLOPE AREAS - WHERE PRESSURE EXCEEDS 50 PSI, CONTRACTOR SHALL INSTALL A PRESSURE REDUCER AND SET PRESSURE REDUCER TO 35 PSI. PRESSURE REDUCER SHALL BE WILKINS LEAD FREE 500XL-YSBR (INCLUDES PRESSURE REDUCER & FILTER; OR APPROVED EQUIVALENT), LINE SIZE, SEE IRRIGATION DETAILS.

NOTE: CONTRACTOR SHALL FIELD STAKE ALL TREE LOCATIONS PRIOR TO INSTALLATION OF IRRIGATION SYSTEM TO AVOID CONFLICTS WITH TREE LOCATIONS AND MAIN LINES/LATERAL LINES. IRRIGATION LATERAL LINES AND MAIN LINES SHALL BE LOCATED 3' MINIMUM HORIZONTALLY FROM TREE LOCATIONS. FIELD ADJUST ROUTING OF IRRIGATION LINES AS NECESSARY TO MEET MINIMUM CLEARANCE NOTED ABOVE.

0 8 16 32 64

CLIENT:
SUMMERHILL HOMES
777 SOUTH CALIFORNIA AVE.
PALO ALTO
CA
94304
TEL 650.842.2421

CALL BEFORE YOU DIG
811
800.227.2600

LICENSED LANDSCAPE ARCHITECT
JERI R. ABED
Lic. No. 3402
Expires
STATE OF CALIFORNIA

VAN DORN ABED
LANDSCAPE ARCHITECTS, INC.
81 14TH ST. SAN FRANCISCO, CA
ZIP 94103 PH (415) 864-1921 FAX(415) 864-6796

PROJECT MANAGER: MW
DRAWN BY: EO
CHECKED BY:

COPYRIGHT © 2006 VAN DORN ABED LANDSCAPE ARCHITECTS, INC.
ALL DRAWINGS & WRITTEN MATERIAL APPEARING HEREIN CONSTITUTE ORIGINAL WORK OF THE ARCHITECT & SAME MAY NOT BE DUPLICATED, USED, OR DISCLOSED WITHOUT WRITTEN CONSENT OF THE LANDSCAPE ARCHITECT.

PROJECT NAME/LOCATION:
RANCHO LAGUNA
CA.
MORAGA
DRAWING TITLE:
LANDSCAPE CONSTRUCTION DRAWINGS

REVISIONS: NO.	DESCRIPTION	BY:	DATE

SHEET TITLE:
IRRIGATION PLAN

SCALE: 1/16" = 1'-0"
ISSUE DATE: 02/27/15
PROJECT NO.: V1226
SHEET NO.: L4.7
34 of 44

HYRDOZONE CHART

SYMBOL	HYDROZONE	DESCRIPTION
H1	H1	**HOA ENTRY & OPEN SPACE AREAS:** LOW WATER USE, SUN EXPOSURE, SHRUB & GROUND COVER AREAS WITH ON-GRADE DRIP EMITTERS.
H2	H2	**HOA ENTRY AREAS:** MEDIUM WATER USE, SUN EXPOSURE, GROUND COVER AREAS WITH BURIED DRIPLINE.
H3	H3	**HOA ENTRY & OPEN SPACE TREE AREAS:** LOW WATER USE, SUN EXPOSURE, TREES WITH ON-GRADE DRIP EMITTERS.
P1	P1	**PRIVATE FRONT YARD AREAS:** MEDIUM WATER USE, SUN EXPOSURE, TREE, SHRUB & GROUND COVER AREAS WITH BURIED DRIPLINE.
P2	P2	**PRIVATE FRONT YARD AREAS:** MEDIUM WATER USE, PARTIAL SHADE EXPOSURE, TREE, SHRUB & GROUND COVER AREAS WITH BURIED DRIPLINE.
P3	P3	**PRIVATE FRONT YARD AREAS:** HIGH WATER USE, SUN EXPOSURE, TURF AREAS WITH BURIED DRIPLINE.

Note: Patterns vary at each Hydrozone for design clarity; each pattern type at each lot/open area is connected to it's own remote control valve.

PRIVATE FRONT YARD IRRIGATION MAIN LINE POINT OF CONNECTION (P.O.C): CONNECT SCH.40 PVC IRRIGATION MAIN LINE TO 1-½ WATER LINE STUB OUT OFF HOUSE WATER SERVICE LINE, PROVIDED BY OWNER/DEVELOPER. STUBOUT LOCATION NOT SHOWN, CONTRACTOR SHALL FIELD VERIFY LOCATION, TYP. NOTE: WATER METERS AT EACH PRIVATE HOUSE ARE 1-1/2" SIZE.

WIRELESS WEATHER SENSOR, LOCATE ON EDGE OF ROOF/GUTTER IN AREA OPEN TO SKY WITH FULL SUN EXPOSURE, IN LOCATION APPROVED BY OWNER'S REPRESENTATIVE; INSTALL PER MANUFACTURER'S INSTRUCTIONS, TYP.

PRIVATE FRONT YARD IRRIGATION CONTROLLER "X", WALL MOUNT IN GARAGE, IN LOCATION APPROVED BY OWNER'S REPRESENTATIVE. CONTRACTOR SHALL 120 VOLT AC POWER TO CONTROLLER, TYP.

HYDROZONE NO., SEE "HYDROZONE CHART" FOR DESCRIPTION OF ZONE, TYP.

SLOPE AREA DRIP CIRCUIT WATER PRESSURE NOTES:

1. CONTRACTOR SHALL VERIFY PRESSURE IN LATERAL LINES ON SLOPE AREAS - WHERE PRESSURE EXCEEDS 50 PSI, CONTRACTOR SHALL INSTALL A PRESSURE REDUCER AND SET PRESSURE REDUCER TO 35 PSI. PRESSURE REDUCER SHALL BE WILKINS LEAD FREE 500XL-YSBR (INCLUDES PRESSURE REDUCER & FILTER; OR APPROVED EQUIVALENT), LINE SIZE, SEE IRRIGATION DETAILS.

GENERAL NOTES:

1. THIS DESIGN IS DIAGRAMMATIC. ALL PIPING, VALVES, ETC., SHOWN WITHIN PAVED AREAS ARE FOR DESIGN CLARIFICATION ONLY AND SHALL BE INSTALLED IN PLANTING AREAS WHERE POSSIBLE, UNLESS OTHERWISE NOTED. AVOID ANY CONFLICTS BETWEEN THE IRRIGATION SYSTEM, PLANTING AND ARCHITECTURAL FEATURES. LOCATE TURF AREA REMOTE CONTROL VALVE(S) IN SHRUB PLANTING AREAS - DO NOT LOCATE IN TURF AREAS OR BIOSWALE/BIORETENTION AREAS.

2. CONTRACTOR SHALL PERFORM PRESSURE TESTS (STATIC & DYNAMIC) AND FLOW TESTS (GPM) AT POINT OF CONNECTION (P.O.C.) PRIOR TO BEGINNING WORK. SEE IRRIGATION NOTES FOR PRESSURE AND FLOW TEST REQUIREMENTS AND PROCEDURES. CONTRACTOR SHALL BE RESPONSIBLE FOR ANY CORRECTIVE MEASURES REQUIRED TO IRRIGATION SYSTEM, AT NO ADDITIONAL COST TO THE OWNER, IF IRRIGATION SYSTEM IS INSTALLED WITHOUT REQUIRED TESTS, AND DISCREPANCIES IN PRESSURE AND FLOW AT THE P.O.C. ARE DISCOVERED THAT PREVENT THE IRRIGATION SYSTEM FROM FUNCTIONING CORRECTLY.

WATER PRESSURE AT P.O.C. NOTES:

1. CONTRACTOR SHALL VERIFY WATER PRESSURE ON SITE. IF PRESSURE IS 65 PSI OR HIGHER AT P.O.C., CONTRACTOR SHALL INSTALL A PRESSURE REDUCER AS SHOWN, AND SET PRESSURE REDUCER TO 65 PSI. PRESSURE REDUCER SHALL BE WILKINS LEAD FREE 500XL-YSBR (INCLUDES PRESSURE REDUCER & FILTER), LINE SIZE, SEE IRRIGATION DETAILS.

2. IF PRESSURE IS LESS THAN 65 PSI OMIT PRESSURE REDUCER.

3. IF PRESSURE IS LESS THAN 55 PSI NOTIFY OWNER'S REPRESENTATIVE AND LANDSCAPE ARCHITECT FOR CORRECTIVE MEASURES.

SLEEVE NOTES:

1. FOR DESIGN CLARITY, NOT ALL SLEEVES SHOWN. CONTRACTOR SHALL SLEEVE ALL PIPES CROSSING UNDER PAVED AREAS.

2. WHERE LATERAL LINES WITH SLEEVES CROSS ROADS OR DRIVEWAYS, CONTRACTOR SHALL INSTALL ONE SPARE 4" CLASS 315 PVC SLEEVE.

3. WHERE MAIN LINES WITH SLEEVES CROSS ROADS OR DRIVEWAYS, CONTRACTOR SHALL INSTALL ONE SPARE 6" CLASS 315 PVC SLEEVE.

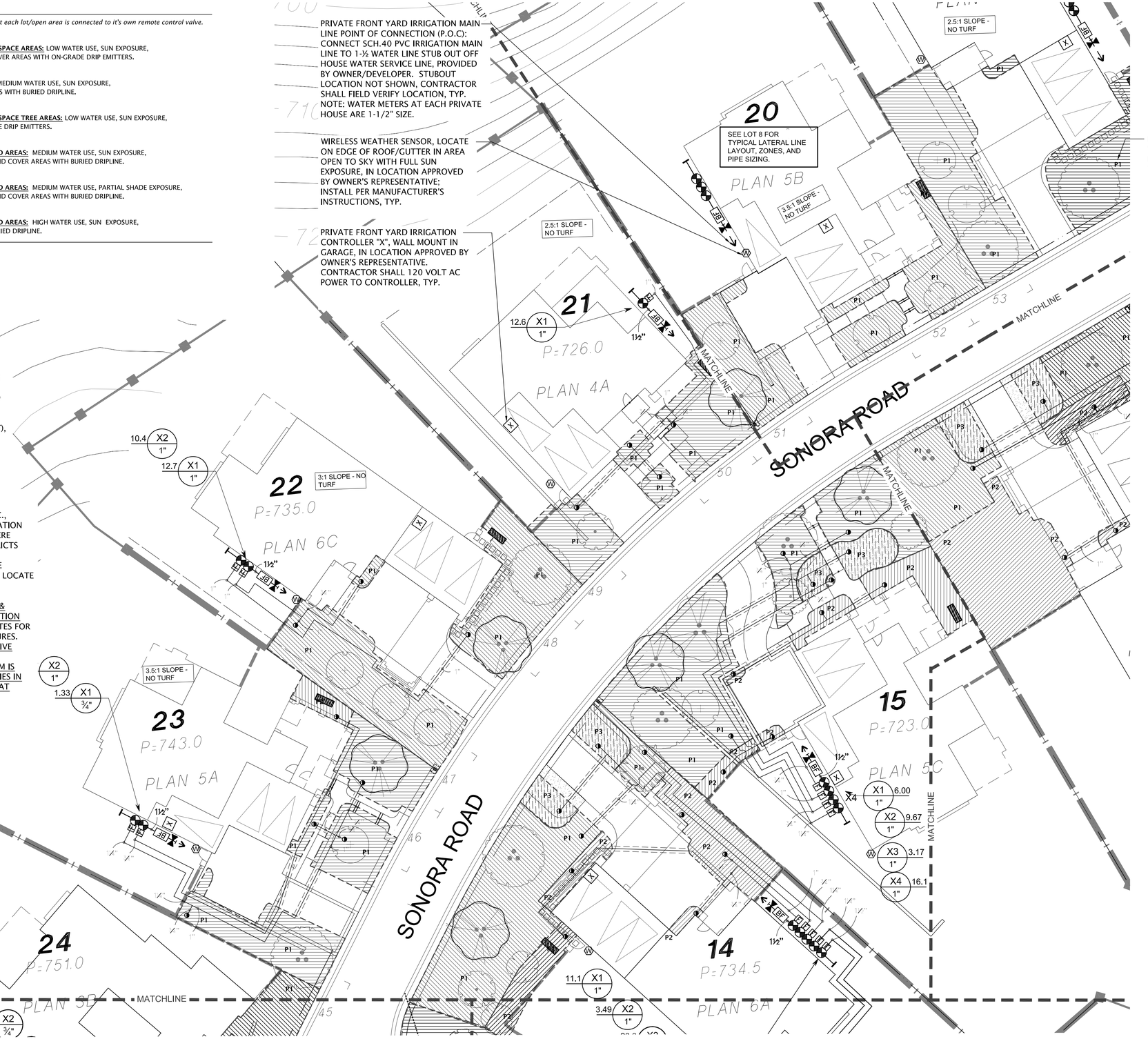

CLIENT:
SUMMERHILL HOMES
777 SOUTH CALIFORNIA AVE.
PALO ALTO
CA
94304
TEL 650.842.2421

USA CALL BEFORE YOU DIG 811 — 800.227.2600

LICENSED LANDSCAPE ARCHITECT — JERI R. ABED — Lic. No. 3402 — Expires — STATE OF CALIFORNIA

VAN DORN ABED
LANDSCAPE ARCHITECTS, INC.
81 14TH ST. SAN FRANCISCO, CA ZIP 94103 PH (415) 864-9221 FAX(415) 864-6796

COPYRIGHT © 2006 VAN DORN ABED LANDSCAPE ARCHITECTS, INC.
ALL DRAWINGS & WRITTEN MATERIAL APPEARING HEREIN CONSTITUTE THE ORIGINAL WORK OF THE ARCHITECT & SAME MAY NOT BE DUPLICATED, USED OR DISCLOSED WITHOUT WRITTEN CONSENT OF THE LANDSCAPE ARCHITECT.

PROJECT MANAGER: MW
DRAWN BY: EO
CHECKED BY:

PROJECT NAME/LOCATION: RANCHO LAGUNA — MORAGA CA
DRAWING TITLE: LANDSCAPE CONSTRUCTION DRAWINGS

REVISIONS: NO.	DESCRIPTION:	BY:	DATE

SHEET TITLE: IRRIGATION PLAN

SCALE: 1/16" = 1'-0"
ISSUE DATE: 02/27/15
PROJECT NO.: V1226
SHEET NO.: L4.8
35 OF 44

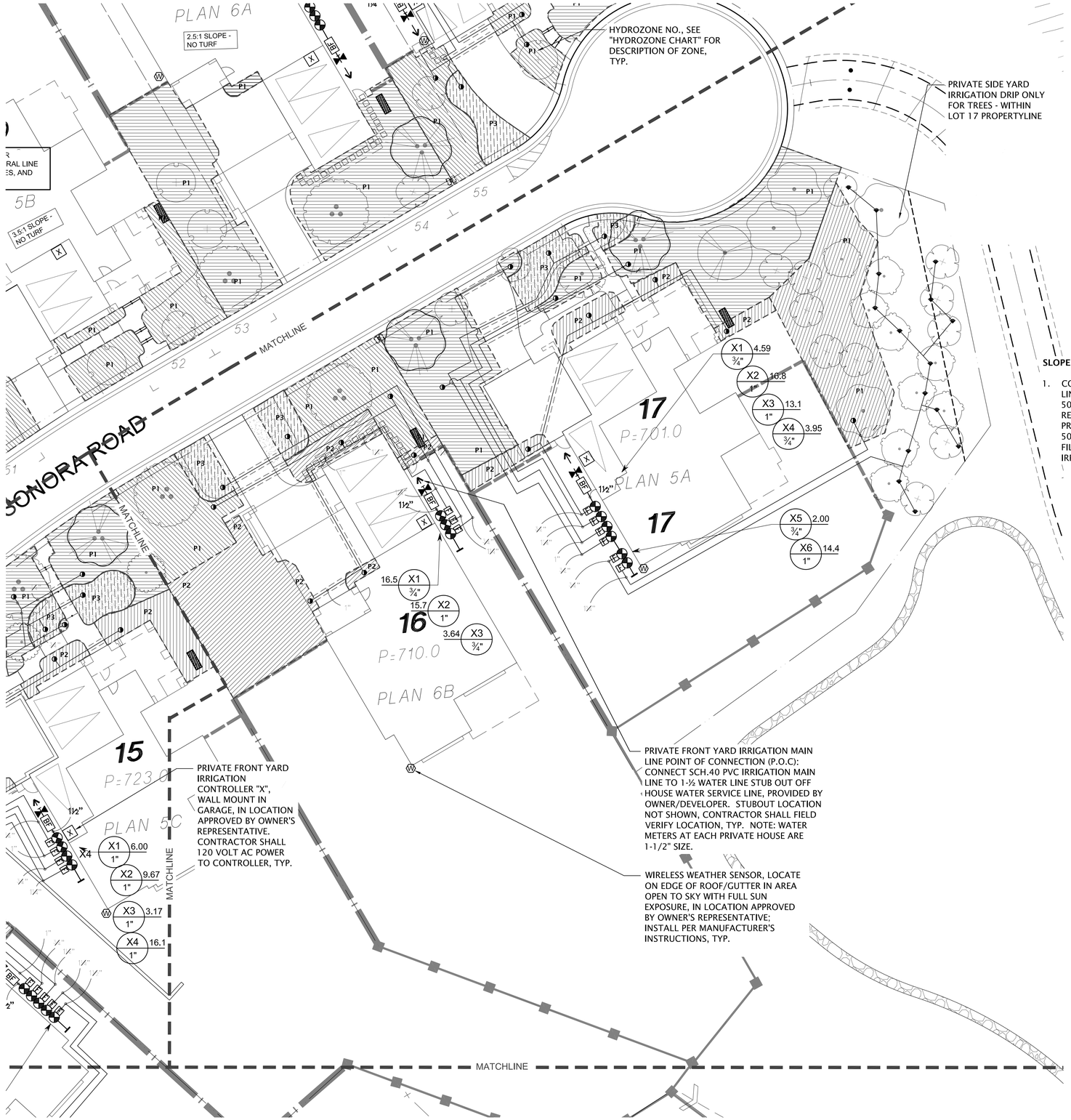

HYRDOZONE CHART

SYMBOL	HYDROZONE	DESCRIPTION
H1	H1	**HOA ENTRY & OPEN SPACE AREAS:** LOW WATER USE, SUN EXPOSURE, SHRUB & GROUND COVER AREAS WITH ON-GRADE DRIP EMITTERS.
H2	H2	**HOA ENTRY AREAS:** MEDIUM WATER USE, SUN EXPOSURE, GROUND COVER AREAS WITH BURIED DRIPLINE.
H3	H3	**HOA ENTRY & OPEN SPACE TREE AREAS:** LOW WATER USE, SUN EXPOSURE, TREES WITH ON-GRADE DRIP EMITTERS.
P1	P1	**PRIVATE FRONT YARD AREAS:** MEDIUM WATER USE, SUN EXPOSURE, TREE, SHRUB & GROUND COVER AREAS WITH BURIED DRIPLINE.
P2	P2	**PRIVATE FRONT YARD AREAS:** MEDIUM WATER USE, PARTIAL SHADE EXPOSURE, TREE, SHRUB & GROUND COVER AREAS WITH BURIED DRIPLINE.
P3	P3	**PRIVATE FRONT YARD AREAS:** HIGH WATER USE, SUN EXPOSURE, TURF AREAS WITH BURIED DRIPLINE.

SLOPE AREA DRIP CIRCUIT WATER PRESSURE NOTES:

1. CONTRACTOR SHALL VERIFY PRESSURE IN LATERAL LINES ON SLOPE AREAS - WHERE PRESSURE EXCEEDS 50 PSI, CONTRACTOR SHALL INSTALL A PRESSURE REDUCER AND SET PRESSURE REDUCER TO 35 PSI. PRESSURE REDUCER SHALL BE WILKINS LEAD FREE 500XL-YSBR (INCLUDES PRESSURE REDUCER & FILTER; OR APPROVED EQUIVALENT), LINE SIZE, SEE IRRIGATION DETAILS.

GENERAL NOTES:

1. THIS DESIGN IS DIAGRAMMATIC. ALL PIPING, VALVES, ETC., SHOWN WITHIN PAVED AREAS ARE FOR DESIGN CLARIFICATION ONLY AND SHALL BE INSTALLED IN PLANTING AREAS WHERE POSSIBLE, UNLESS OTHERWISE NOTED. AVOID ANY CONFLICTS BETWEEN THE IRRIGATION SYSTEM, PLANTING AND ARCHITECTURAL FEATURES. LOCATE TURF AREA REMOTE CONTROL VALVE(S) IN SHRUB PLANTING AREAS - DO NOT LOCATE IN TURF AREAS OR BIOSWALE/BIORETENTION AREAS.

2. CONTRACTOR SHALL PERFORM PRESSURE TESTS (STATIC & DYNAMIC) AND FLOW TESTS (GPM) AT POINT OF CONNECTION (P.O.C.) PRIOR TO BEGINNING WORK. SEE IRRIGATION NOTES FOR PRESSURE AND FLOW TEST REQUIREMENTS AND PROCEDURES. CONTRACTOR SHALL BE RESPONSIBLE FOR ANY CORRECTIVE MEASURES REQUIRED TO IRRIGATION SYSTEM, AT NO ADDITIONAL COST TO THE OWNER, IF IRRIGATION SYSTEM IS INSTALLED WITHOUT REQUIRED TESTS, AND DISCREPANCIES IN PRESSURE AND FLOW AT THE P.O.C. ARE DISCOVERED THAT PREVENT THE IRRIGATION SYSTEM FROM FUNCTIONING CORRECTLY.

WATER PRESSURE AT P.O.C. NOTES:

1. CONTRACTOR SHALL VERIFY WATER PRESSURE ON SITE. IF PRESSURE IS 65 PSI OR HIGHER AT P.O.C., CONTRACTOR SHALL INSTALL A PRESSURE REDUCER AS SHOWN, AND SET PRESSURE REDUCER TO 65 PSI. PRESSURE REDUCER SHALL BE WILKINS LEAD FREE 500XL-YSBR (INCLUDES PRESSURE REDUCER & FILTER), LINE SIZE, SEE IRRIGATION DETAILS.

2. IF PRESSURE IS LESS THAN 65 PSI OMIT PRESSURE REDUCER.

3. IF PRESSURE IS LESS THAN 55 PSI NOTIFY OWNER'S REPRESENTATIVE AND LANDSCAPE ARCHITECT FOR CORRECTIVE MEASURES.

SLEEVE NOTES:

1. FOR DESIGN CLARITY, NOT ALL SLEEVES SHOWN. CONTRACTOR SHALL SLEEVE ALL PIPES CROSSING UNDER PAVED AREAS.

2. WHERE LATERAL LINES WITH SLEEVES CROSS ROADS OR DRIVEWAYS, CONTRACTOR SHALL INSTALL ONE SPARE 4" CLASS 315 PVC SLEEVE.

3. WHERE MAIN LINES WITH SLEEVES CROSS ROADS OR DRIVEWAYS, CONTRACTOR SHALL INSTALL ONE SPARE 6" CLASS 315 PVC SLEEVE.

NOTE: CONTRACTOR SHALL FIELD STAKE ALL TREE LOCATIONS PRIOR TO INSTALLATION OF IRRIGATION SYSTEM TO AVOID CONFLICTS WITH TREE LOCATIONS AND MAIN LINES/LATERAL LINES. IRRIGATION LATERAL LINES AND MAIN LINES SHALL BE LOCATED 3' MINIMUM HORIZONTALLY FROM TREE LOCATIONS. FIELD ADJUST ROUTING OF IRRIGATION LINES AS NECESSARY TO MEET MINIMUM CLEARANCE NOTED ABOVE.

0 8 16 32 64

CLIENT:
SUMMERHILL HOMES
777 SOUTH CALIFORNIA AVE.
PALO ALTO
CA
94304
TEL 650.842.2421

CALL BEFORE YOU DIG
800.227.2600

LICENSED LANDSCAPE ARCHITECT
JERI R. ABED
Lic. No. 3402
Expires
STATE OF CALIFORNIA

VAN DORN ABED
LANDSCAPE ARCHITECTS, INC.
81 14TH ST. SAN FRANCISCO, CA
ZIP 94103 PH (415) 864-1921 FAX(415) 864-6796

COPYRIGHT © 2015 VAN DORN ABED LANDSCAPE ARCHITECTS, INC.
ALL DRAWINGS & WRITTEN MATERIAL APPEARING HEREIN CONSTITUTE ORIGINAL WORK OF THE LANDSCAPE ARCHITECT & SAME MAY NOT BE DUPLICATED, USED OR DISCLOSED WITHOUT WRITTEN CONSENT OF THE LANDSCAPE ARCHITECT.

PROJECT MANAGER: MW
DRAWN BY: EO
CHECKED BY:

PROJECT NAME/LOCATION:
RANCHO LAGUNA
MORAGA
DRAWING TITLE:
LANDSCAPE CONSTRUCTION DRAWINGS

REVISIONS: NO.	DESCRIPTION:	BY:	DATE:

SHEET TITLE:
IRRIGATION PLAN

SCALE: 1/16" = 1'-0"
ISSUE DATE: 02/27/15
PROJECT NO.: V1226
SHEET NO.: L4.9

HYRDOZONE CHART

SYMBOL	HYDROZONE	DESCRIPTION
H1 H1 H1	H1	**HOA ENTRY & OPEN SPACE AREAS:** LOW WATER USE, SUN EXPOSURE, SHRUB & GROUND COVER AREAS WITH ON-GRADE DRIP EMITTERS.
H2	H2	**HOA ENTRY AREAS:** MEDIUM WATER USE, SUN EXPOSURE, GROUND COVER AREAS WITH BURIED DRIPLINE.
	H3	**HOA ENTRY & OPEN SPACE TREE AREAS:** LOW WATER USE, SUN EXPOSURE, TREES WITH ON-GRADE DRIP EMITTERS.
P1 P1 P1	P1	**PRIVATE FRONT YARD AREAS:** MEDIUM WATER USE, SUN EXPOSURE, TREE, SHRUB & GROUND COVER AREAS WITH BURIED DRIPLINE.
P2 P2 P2	P2	**PRIVATE FRONT YARD AREAS:** MEDIUM WATER USE, PARTIAL SHADE EXPOSURE, TREE, SHRUB & GROUND COVER AREAS WITH BURIED DRIPLINE.
P3	P3	**PRIVATE FRONT YARD AREAS:** HIGH WATER USE, SUN EXPOSURE, TURF AREAS WITH BURIED DRIPLINE.

Note: Patterns vary at each Hydrozone for design clarity; each pattern type at each lot/open area is connected to it's own remote control valve.

NOTE: CONTRACTOR SHALL FIELD STAKE ALL TREE LOCATIONS PRIOR TO INSTALLATION OF IRRIGATION SYSTEM TO AVOID CONFLICTS WITH TREE LOCATIONS AND MAIN LINES/LATERAL LINES. IRRIGATION LATERAL LINES AND MAIN LINES SHALL BE LOCATED 3' MINIMUM HORIZONTALLY FROM TREE LOCATIONS. FIELD ADJUST ROUTING OF IRRIGATION LINES AS NECESSARY TO MEET MINIMUM CLEARANCE NOTED ABOVE.

WIRELESS WEATHER SENSOR, LOCATE ON EDGE OF ROOF/GUTTER IN AREA OPEN TO SKY WITH FULL SUN EXPOSURE, IN LOCATION APPROVED BY OWNER'S REPRESENTATIVE; INSTALL PER MANUFACTURER'S INSTRUCTIONS, TYP.

PRIVATE FRONT YARD IRRIGATION MAIN LINE POINT OF CONNECTION (P.O.C): CONNECT SCH.40 PVC IRRIGATION MAIN LINE TO 1-½ WATER LINE STUB OUT OFF HOUSE WATER SERVICE LINE, PROVIDED BY OWNER/DEVELOPER. STUBOUT LOCATION NOT SHOWN, CONTRACTOR SHALL FIELD VERIFY LOCATION, TYP. NOTE: WATER METERS AT EACH PRIVATE HOUSE ARE 1-1/2" SIZE.

PRIVATE FRONT YARD IRRIGATION CONTROLLER "X", WALL MOUNT IN GARAGE, IN LOCATION APPROVED BY OWNER'S REPRESENTATIVE. CONTRACTOR SHALL 120 VOLT AC POWER TO CONTROLLER, TYP.

HYDROZONE NO., SEE "HYDROZONE CHART" FOR DESCRIPTION OF ZONE, TYP.

19 — SEE LOT 22 FOR TYPICAL LATERAL LINE LAYOUT, ZONES, AND PIPE SIZING. PLAN 6A — 2.5:1 SLOPE - NO TURF

20 — SEE LOT 8 FOR TYPICAL LATERAL LINE LAYOUT, ZONES, AND PIPE SIZING. PLAN 5B — 3.5:1 SLOPE - NO TURF

18 P=702.0 PLAN 4C

21 P=726.0 PLAN 4A

17 P=701.0 PLAN 5A

SONORA ROAD — MATCHLINE

X3 16.9 ¾" | X2 2.48 ¾" | X1 7.98 ¾" | 11¼" | 1½" | 12.6 X1 1" | 16.5 X1 ¾" | X1 4.59 ¾" | X2 16.8 1" | X3 13.1 1" | X4 3.95 ¾" | X5 2.00 ¾" | X6 14.4 1"

0 8 16 32 64

GENERAL NOTES:

1. THIS DESIGN IS DIAGRAMMATIC. ALL PIPING, VALVES, ETC., SHOWN WITHIN PAVED AREAS ARE FOR DESIGN CLARIFICATION ONLY AND SHALL BE INSTALLED IN PLANTING AREAS WHERE POSSIBLE, UNLESS OTHERWISE NOTED. AVOID ANY CONFLICTS BETWEEN THE IRRIGATION SYSTEM, PLANTING AND ARCHITECTURAL FEATURES. LOCATE TURF AREA REMOTE CONTROL VALVE(S) IN SHRUB PLANTING AREAS - DO NOT LOCATE IN TURF AREAS OR BIOSWALE/BIORETENTION AREAS.
2. CONTRACTOR SHALL PERFORM PRESSURE TESTS (STATIC & DYNAMIC) AND FLOW TESTS (GPM) AT POINT OF CONNECTION (P.O.C.) PRIOR TO BEGINNING WORK. SEE IRRIGATION NOTES FOR PRESSURE AND FLOW TEST REQUIREMENTS AND PROCEDURES. CONTRACTOR SHALL BE RESPONSIBLE FOR ANY CORRECTIVE MEASURES REQUIRED TO IRRIGATION SYSTEM, AT NO ADDITIONAL COST TO THE OWNER, IF IRRIGATION SYSTEM IS INSTALLED WITHOUT REQUIRED TESTS, AND DISCREPANCIES IN PRESSURE AND FLOW AT THE P.O.C. ARE DISCOVERED THAT PREVENT THE IRRIGATION SYSTEM FROM FUNCTIONING CORRECTLY.

WATER PRESSURE AT P.O.C. NOTES:

1. CONTRACTOR SHALL VERIFY WATER PRESSURE ON SITE. IF PRESSURE IS 65 PSI OR HIGHER AT P.O.C., CONTRACTOR SHALL INSTALL A PRESSURE REDUCER AS SHOWN, AND SET PRESSURE REDUCER TO 65 PSI. PRESSURE REDUCER SHALL BE WILKINS LEAD FREE 500XL-YSBR (INCLUDES PRESSURE REDUCER & FILTER), LINE SIZE, SEE IRRIGATION DETAILS.
2. IF PRESSURE IS LESS THAN 65 PSI OMIT PRESSURE REDUCER.
3. IF PRESSURE IS LESS THAN 55 PSI NOTIFY OWNER'S REPRESENTATIVE AND LANDSCAPE ARCHITECT FOR CORRECTIVE MEASURES.

SLEEVE NOTES:

1. FOR DESIGN CLARITY, NOT ALL SLEEVES SHOWN. CONTRACTOR SHALL SLEEVE ALL PIPES CROSSING UNDER PAVED AREAS.
2. WHERE LATERAL LINES WITH SLEEVES CROSS ROADS OR DRIVEWAYS, CONTRACTOR SHALL INSTALL ONE SPARE 4" CLASS 315 PVC SLEEVE.
3. WHERE MAIN LINES WITH SLEEVES CROSS ROADS OR DRIVEWAYS, CONTRACTOR SHALL INSTALL ONE SPARE 6" CLASS 315 PVC SLEEVE.

SLOPE AREA DRIP CIRCUIT WATER PRESSURE NOTES:

1. CONTRACTOR SHALL VERIFY PRESSURE IN LATERAL LINES ON SLOPE AREAS - WHERE PRESSURE EXCEEDS 50 PSI, CONTRACTOR SHALL INSTALL A PRESSURE REDUCER AND SET PRESSURE REDUCER TO 35 PSI. PRESSURE REDUCER SHALL BE WILKINS LEAD FREE 500XL-YSBR (INCLUDES PRESSURE REDUCER & FILTER; OR APPROVED EQUIVALENT), LINE SIZE, SEE IRRIGATION DETAILS.

CLIENT:
SUMMERHILL HOMES
777 SOUTH CALIFORNIA AVE.
PALO ALTO
CA
94304
TEL 650.842.2421

CALL BEFORE YOU DIG — 811 — 800.227.2600

LICENSED LANDSCAPE ARCHITECT — JERY R. ABED — Lic. No. 3402 — Expires — STATE OF CALIFORNIA

VAN DORN ABED
LANDSCAPE ARCHITECTS, INC.
81 14TH ST. SAN FRANCISCO, CA ZIP 94103 PH (415) 864-1921 FAX(415) 864-6796

COPYRIGHT © 2015 VAN DORN ABED LANDSCAPE ARCHITECTS, INC.
ALL DRAWINGS & WRITTEN MATERIAL APPEARING HEREIN CONSTITUTE ORIGINAL WORK OF THE ARCHITECT & SAME MAY NOT BE DUPLICATED, USED OR DISCLOSED WITHOUT WRITTEN CONSENT OF THE LANDSCAPE ARCHITECT.

PROJECT MANAGER: MW
DRAWN BY: EO
CHECKED BY:

PROJECT NAME/LOCATION:
RANCHO LAGUNA
MORAGA CA

DRAWING TITLE:
LANDSCAPE CONSTRUCTION DRAWINGS

REVISIONS: NO.	DESCRIPTION	BY:	DATE

SHEET TITLE:
IRRIGATION PLAN

SCALE: 1/16" = 1'-0"
ISSUE DATE: 02/27/15
PROJECT NO.: V1226
SHEET NO.: L4.10

IRRIGATION SCHEDULE

SYMBOL	MANUFACTURER/MODEL/DESCRIPTION
●	PVC LATERAL LINE TO DRIP AREA WITH OCTABUBBLERS. ROUTE PVC LATERAL LINE THRU DRIP AREA AND INSTALL REQUIRED QUANTITY OF OCTABUBBLERS NECESSARY TO IRRIGATE PLANTS IN THE DRIP AREA.
◆	Rain Bird XBD81-PRS w/XB-10 (1.0gph emitters 8 multi-outlet drip at HOA trees). Xeri-Bird 8 Multi Outlet Emission Device with Xeri-Bug emitters at 1gph each, with built-in 200 mesh filter. Pressure Regulator in-stem.
	Area to Receive Drip Emitters PEPCO OCTABUBBLER OCTA816 8 outlet bubbler, 1/2" FPT inlet base, built-in backflow prevention device, with 2.0 gph blue emitters Emitter Notes: 1 gal plant to receive 1 of OCT8-16 emitter. 15 gal plant to receive 4 of OCT8-16 emitters. flat plant to receive 1 of OCT8-16 emitter. 5 gal plant to receive 2 of OCT8-16 emitters. 15 GAL MULTI plant to receive 4 of OCT8-16 emitters.
	Area to Receive Dripline Toro RGP-212 (12) Landscape Dripline with Rootguar and 0.53gph emitters at 12" o.c. Dripline lateral rows spaced at 12" apart, with emitters offset for triangular pattern.
SYMBOL	MANUFACTURER/MODEL/DESCRIPTION
◒	Irritrol 700 with OMR-100 Electric Remote Control Valve, with Omni-Reg 5-100psi regulator, and self flushing 150-mesh stainless steel filter screen.
◪	Toro 474 075-SL-LVC 3/4" Quick Coupler Valve, with locking cover
⧗	Nibco T-113-LF Lead Free Class 125 bronze gate shut off valve with wheel handle, same size as pipe diameter
MV	Griswold 2160LE 2" 2" Solenoid, Normally Open Master Valve. Epoxy Coating. Cast Iron and Bronze Material. NPT End Connection.
⚠	500XL-YSBR Lead Free Pressure Reducing Valve, line size. Includes pressure reducer and filter, set at 65 PSI
BF 2	Febco LF825Y 1-1/2" Lead Free Reduced Pressure Backflow Preventer with Febco 650A 20 mesh Y strainer.
BF	Febco LF825Y 1-1/4" Lead Free Reduced Pressure Backflow Preventer with Febco 650A 20 mesh Y strainer.
A	Irritrol MC-48-E 48- Station, Commercial-Grade, Outdoor/Indoor Controller. Equipped in a rugged, lockable, vandal-proof, weather resistant steel cabinet. Install in Irritrol P-6B Pedestal. Compatible with Irritrol`s Climate Logic.
X	Irritrol TC-12-IN-R Hybrid Controller, 12- Station, Indoor Model, with Plastic Cabinet. Climate Logic compatible, and Remote-Ready.
W	Irritrol CL Wireless Weather Sensing System. 100-Receive and Transmitter Kit. Outdoor sensor, and receiver attaches to Irritrol Controller. Install one receiver per controller, to allow one CI unit to provide data to both controllers. Compatible with Rain Dial-R, Total Control-R, KwikDial, and MC-E controllers. Monitors weather data.
FS	Toro TFS-150 1-1/2" Flow Sensor Install per manufactures specifications.
F	Amiad 150 mesh Y-Filter with flush valve, or approved equivalent, at drip remote control valves
W	Water Meter 1"
———	Irrigation Lateral Line: PVC Class 200 SDR 21 with solvent weld Sch.40 fittings. Only lateral transition pipe sizes 1" and above are indicated on the plan, with all others being 3/4" in size. 12" min. burry.
— — — —	Irrigation Mainline: PVC Schedule 40 and Class 315 with solvent weld Sch.40 fittings. PVC Schedule 40 to 1-1/2", PVC Class 315 SDR 13.5 for pipes 2" and larger. 18" min. bury.
= = = =	Pipe Sleeve: PVC Class 315 SDR 13.5 Typical pipe sleeve for irrigation pipe. Pipe sleeve size shall allow for irrigation piping and their related couplings to easily slide through sleeving material. Extend sleeves 18 inches beyond edges of paving or construction. 24" min. bury.
Valve Callout #' Valve Number # Valve GPM #" Valve Size	
◑	Drip zone connection point: PVC lateral line connection to subsurface dripline tubing manifold. Note-location diagrammatic, see drip details for PVC lateral to drip tubing
←—	Private front yard irrigation main line point of connection (P.O.C): Connect Sch.40 PVC irrigation main line to 1-½ water line stub out off house water service line, provided by Owner/Developer. Stubout location not shown, Contractor shall field verify location.
—|	1-1/4" Sch.40 PVC main line stobout and Sch.80 Cap, for future use by homeowner.

Note: Patterns vary at each Hydrozone for design clarity; each pattern type at each lot/open space area is connected to it's own remote control valve.

HYDROZONE NO., SEE "HYDROZONE CHART" FOR DESCRIPTION OF ZONES

Note: Patterns vary at each Hydrozone for design clarity; each pattern type at each lot/open space area is connected to it's own remote control valve.

NOTE: AT TREE DRIP CIRCUITS INSTALL:
4 EMITTERS/15G TREE
6 EMITTERS/24" BOX TREE
8 EMITTERS/36" BOX TREE
10 EMITTERS/48" BOX TREE
CAP UNUSED OUTLETS

NOTE: TUBING INSTALLED BELOW GRADE, SEE DRIP DETAILS. FLUSH VALVE AND AIR RELIEF VALVES NOT SHOW ON PLANS FOR DESIGN CLARITY, SEE DRIP DETAILS FOR TYPICAL INSTALLATION LOCATIONS AT EACH DRIP CIRCUIT.

SET PRESSURE REGULATORS AT 45 PSI.

CONTROLLER FOR HOA AREAS.

CONTROLLER FOR PRIVATE FRONT YARDS.

Y-FILTER TO BE INSTALLED AT DRIP CIRCUITS.

NOTE: SEE P.O.C. NOTES ON IRRIGATION PLANS.

NOTE: LOCATION DIAGRAMMATIC, SEE DRIP DETAILS FOR PVC LATERAL TO DRIP TUBING MANIFOLD CONNECTION.

HYRDOZONE CHART

SYMBOL	HYDROZONE	DESCRIPTION
	H1	**HOA ENTRY & OPEN SPACE AREAS:** LOW WATER USE, SUN EXPOSURE, SHRUB & GROUND COVER AREAS WITH ON-GRADE DRIP EMITTERS.
	H2	**HOA ENTRY AREAS:** MEDIUM WATER USE, SUN EXPOSURE, GROUND COVER AREAS WITH BURIED DRIPLINE.
	H3	**HOA ENTRY & OPEN SPACE TREE AREAS:** LOW WATER USE, SUN EXPOSURE, TREES WITH ON-GRADE DRIP EMITTERS.
	P1	**PRIVATE FRONT YARD AREAS:** MEDIUM WATER USE, SUN EXPOSURE, TREE, SHRUB & GROUND COVER AREAS WITH BURIED DRIPLINE.
	P2	**PRIVATE FRONT YARD AREAS:** MEDIUM WATER USE, PARTIAL SHADE EXPOSURE, TREE, SHRUB & GROUND COVER AREAS WITH BURIED DRIPLINE.
	P3	**PRIVATE FRONT YARD AREAS:** HIGH WATER USE, SUN EXPOSURE, TURF AREAS WITH BURIED DRIPLINE.

WATER USE CALCULATION NOTES:

1. IRRIGATION ZONES/VALVE CIRCUITS ARE GROUPED BY HYDROZONES:
   - LOW WATER USE HYDROZONES CONSIST OF TREE, SHRUB & GROUND COVER HOA OPEN SPACE AREAS.
   - MEDIUM WATER USE HYDROZONES CONSIST OF MEDIUM WATER USE GROUND COVERS AT ENTRY AREAS & TREE, SHRUB & GROUND COVERS AT PRIVATE FRONT YARD AREAS. SOME OF THE MEDIUM WATER USE HYDROZONES AT THE FRONT YARD AREAS HAVE A MIX OF MEDIUM AND LOW WATER USE PLANTS - THESE ZONES ARE TREATED AS MEDIUM WATER USE ZONES.
   - HIGH WATER USE HYDROZONES CONSIST OF TURF AREAS AT THE PRIVATE FRONT YARD AREAS.
2. THE LANDSCAPE WATER USE CALCULATIONS ARE PER THE STATE OF CALIFORNIA'S AB 1881 MODEL WATER EFFICIENT LANDSCAPE ORDINANCE.
3. THIS PROJECTS WATER USE IS LESS THAN THE MAXIMUM PERMITTED, THEREFORE THIS PROJECT IS A WATER CONSERVING LANDSCAPE DESIGN.

HOA LANDSCAPE AREA WATER USE CALCULATIONS (TOTAL HOA OPEN SPACE SLOPE & ENTRY LANDSCAPE AREAS)

MAXIMUM APPLIED WATER ALLOWANCE (MAWA):

Total Landscape Area: 50,190
Total Turf Area: 0
Percent Turf Area: 0%

ANNUAL ETo x	CONSTANT x	((ET FACTOR x	LA SQ.FT.] +	[ET FACTOR x	SLA SQ.FT.))	TOTAL GALLONS/YEAR	TOTAL CUBIC FT/YEAR
44.95	0.62	0.70	50,190	0.30	0	979,122	130,899

LANDSCAPE HYRDROZONE TABLE & CALCULATIONS

		PLANT WATER USE TYPE x	(PF) PLANT FACTOR	x (HA) HYRDROZONE SQ.FT. =	PF x HA SQ.FT.
Hydrozone H1:	*Shrub & Ground Covers at Open Space/Entry Areas (on-grade drip emitters, low water use)*	LOW	0.30	28,359	8,508
Hydrozone H2:	*Ground Covers at Entry Areas (burried drip emitters, medium water use)*	LOW	0.50	843	422
Hydrozone H3:	*Trees at Open Space/Entry Areas (on-grade drip emitters, low water use)*	LOW	0.30	20,988	6,296

ESTIMATED TOTAL WATER USE (ETWU):

		ANNUAL ETo x	CONSTANT x	PF x HA (TOTAL /	IRRIGATION EFFICIENCY)	TOTAL GALLONS/YEAR	TOTAL CUBIC FT/YEAR
Hydrozone H1:	*Shrub & Ground Covers at Open Space/Entry Areas (on-grade drip emitters, low water use)*	44.95	0.62	8,508	0.90	263,446	35,220
Hydrozone H2:	*Ground Covers at Entry Areas (burried drip emitters, medium water use)*	44.95	0.62	422	0.90	13,052	1,745
Hydrozone H3:	*Trees at Open Space/Entry Areas (on-grade drip emitters, low water use)*	44.95	0.62	6,296	0.90	194,972	26,066
					ETWU TOTAL:	471,469	63,031
					MAWA TOTAL:	979,122	130,899
					UNDER MAWA BY:	507,652	67,868

PRIVATE LANDSCAPE AREA WATER USE CALCULATIONS (TOTAL PRIVATE LANDSCAPE AREAS AT LOTS: 1-26)

MAXIMUM APPLIED WATER ALLOWANCE (MAWA):

Total Landscape Area: 65,496
Total Turf Area: 7,638
Percent Turf Area: 12%

ANNUAL ETo x	CONSTANT x	((ET FACTOR x	LA SQ.FT.] +	[ET FACTOR x	SLA SQ.FT.))	TOTAL GALLONS/YEAR	TOTAL CUBIC FT/YEAR
44.95	0.62	0.70	65,496	0.30	0	1,277,716	170,818

LANDSCAPE HYRDROZONE TABLE & CALCULATIONS

		PLANT WATER USE TYPE x	(PF) PLANT FACTOR	x (HA) HYRDROZONE SQ.FT. =	PF x HA SQ.FT.
Hydrozone P1:	*Tree, Shrub & Ground Cover Areas (buried driplines, medium water use, sun exposure)*	MEDIUM	0.50	52,792	26,396
Hydrozone P2:	*Tree, Shrub & Ground Cover Areas (buried driplines, medium water use, partial shade exposure)*	MEDIUM	0.50	5,066	2,533
Hydrozone P3:	*Turf Areas (buried dripline, high water use, sun exposure)*	HIGH	0.80	7,638	6,110

ESTIMATED TOTAL WATER USE (ETWU):

		ANNUAL ETo x	CONSTANT x	PF x HA (TOTAL /	IRRIGATION EFFICIENCY)	TOTAL GALLONS/YEAR	TOTAL CUBIC FT/YEAR
Hydrozone P1:	*Tree, Shrub & Ground Cover Areas (buried driplines, medium water use, sun exposure)*	44.95	0.62	26,396	0.90	817,367	109,274
Hydrozone P2:	*Tree, Shrub & Ground Cover Areas (buried driplines, medium water use, partial shade exposure)*	44.95	0.62	2,533	0.90	78,436	10,486
Hydrozone P3:	*Turf Areas (buried dripline, high water use, sun exposure)*	44.95	0.62	6,110	0.90	189,212	25,296
					ETWU TOTAL:	1,085,014	145,055
					MAWA TOTAL:	1,277,716	170,818
					UNDER MAWA BY:	192,701	25,762

IRRIGATION CONTROLLER NOTES:

1. IRRIGATION CONTROLLER RUN TIMES ARE NOT INCLUDED ON LANDSCAPE PLANS. IRRIGATION CONTROLLERS ARE ET BASED SMART CONTROLLERS THAT GENERATE OPTIMUM RUN TIME SCHEDULES BASED UPON LOCAL WEATHER CONDITIONS.
2. CONTROLLERS ARE INITIALLY PROGRAMMED WITH A BASE LINE PROGRAM. EACH DAY CONTROLLERS RECEIVES LOCAL WEATHER CONDITION DATA (VIA ON-SITE WIRELESS WEATHER SENSOR), AND AUTOMATICALLY ADJUST THEIR WATERING SCHEDULES FOR OPTIMUM WATER CONSERVATION.
3. CONTRACTOR SHALL PROGRAM CONTROLLER "A" FLOW MONITORING FEATURE TO DETECT FLOWS OF 5 GPM ABOVE PEAK RECORDED GPM FLOW FOR MAIN LINE AND LATERAL LINES/RCVS. CONTROLLER SHALL BE SET TO SHUT MASTER VALVE AND CONTROLLER OFF IN THE EVENT OF AN OVERFLOW CONDITION (MAIN LINE OR LATERAL LINE BREAK).

CLIENT:
SUMMERHILL HOMES
777 SOUTH CALIFORNIA AVE.
PALO ALTO
CA
94304
TEL 650.842.2421

CALL BEFORE YOU DIG
USA
811
800.227.2600

LICENSED LANDSCAPE ARCHITECT
JEFF R. ABED
Lic. No. 3402
Expires
STATE OF CALIFORNIA

VAN DORN ABED
LANDSCAPE ARCHITECTS, INC.
81 14TH ST. SAN FRANCISCO, CA
ZIP 94103 PH (415) 864-1921 FAX(415) 864-4796

COPYRIGHT © 2006 VAN DORN ABED LANDSCAPE ARCHITECTS, INC.
ALL DRAWINGS & WRITTEN MATERIAL APPEARING HEREIN CONSTITUTE ORIGINAL WORK OF THE ARCHITECT & SAME MAY NOT BE DUPLICATED, USED OR DISCLOSED WITHOUT THE WRITTEN CONSENT OF THE LANDSCAPE ARCHITECT.

PROJECT MANAGER: MW
DRAWN BY: EO
CHECKED BY:

PROJECT NAME/LOCATION:
RANCHO LAGUNA
MORAGA CA.
DRAWING TITLE:
LANDSCAPE CONSTRUCTION DRAWINGS

REVISIONS:

NO.	DESCRIPTION	BY:	DATE

SHEET TITLE:
IRRIGATION LEGEND

SCALE: 1/16" = 1'-0"
ISSUE DATE: 02/27/15
PROJECT NO.: V1226
SHEET NO.: L4.11
38 OF 44

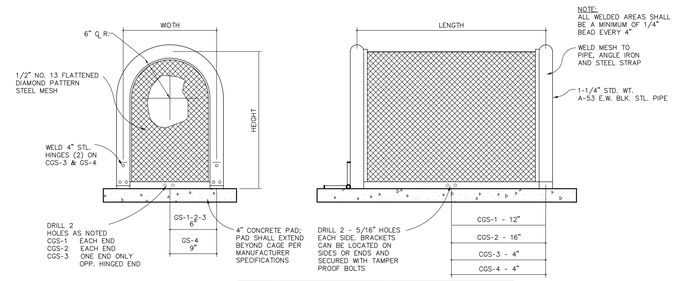

STD. SIZES	CENTERLINE DIMENSIONS		WEIGHT GS	WEIGHT CGS
CGS-.5	12"W x 18"H x 12"L	LIFT OFF UNIT	35	30
CGS-1	12"W x 24"H x 24"L	LIFT OFF UNIT	40	34
CGS-2	12"W x 24"H x 32"L	LIFT OFF UNIT	45	40

NOTES:

1. SELECT CAGE SIZE TO MATCH BACKFLOW PREVENTER SIZE. SEE IRRIGATION LEGEND FOR BACKFLOW SIZES.

2. FINISH TO BE (CGS) STAINLESS STEEL COAST GUARD SHACK W/ SAND BLASTED SATIN FINISH.

3 ALL BOLTS FOR HINGES AND HASPS SHALL BE STAINLESS STEEL TAMPER PROOF.

4. INSTALL WEATHER PROOF LOCK. PROVIDE OWNER 4 SETS OF KEYS.

1 GUARDSHACK 1/2" – 2" BACKFLOW CAGE DETAIL
NOT TO SCALE

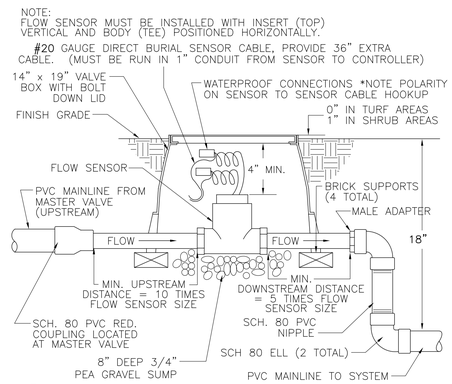

2 FLOW SENSOR INSTALLATION DETAIL
NOT TO SCALE

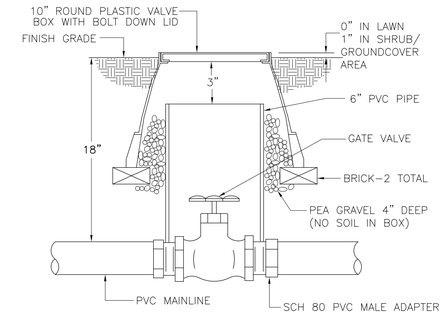

3 GATE VALVE DETAIL
NOT TO SCALE

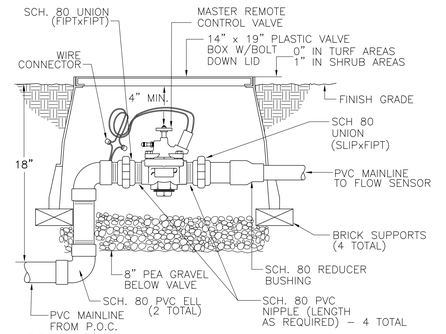

4 MASTER REMOTE CONTROL VALVE DETAIL
NOT TO SCALE

NOTE: EVENLY COAT METAL FITTINGS EXPOSED TO SOIL AND CONCRETE WITH 3M SCOTCHRAP PIPE PRIMER AND THEN WRAP WITH 3M SCOTCHRAP NO. 51 BLACK TAPE (3/4" OVERLAP).

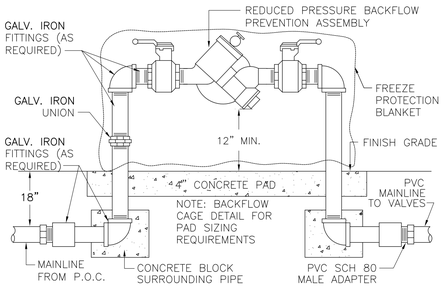

5 REDUCED PRESSURE BACKFLOW PREVENTER DETAIL
NOT TO SCALE

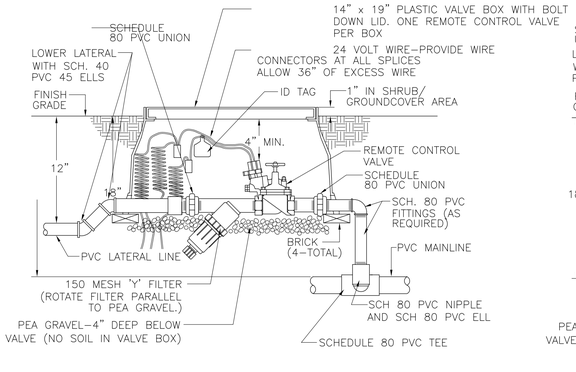

6 REMOTE CONTROL VALVE & 'Y' FILTER DETAIL
NOT TO SCALE

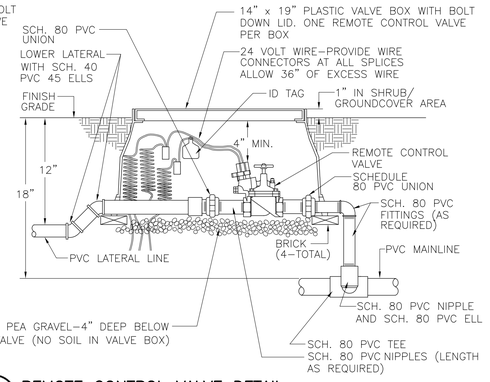

7 REMOTE CONTROL VALVE DETAIL
NOT TO SCALE

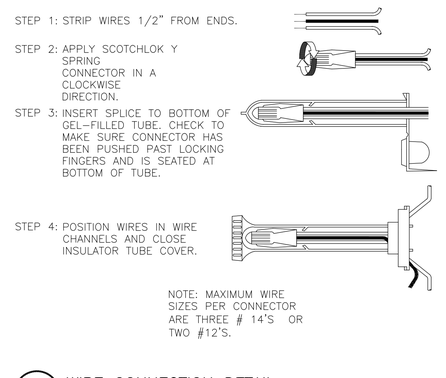

8 WIRE CONNECTION DETAIL
NOT TO SCALE

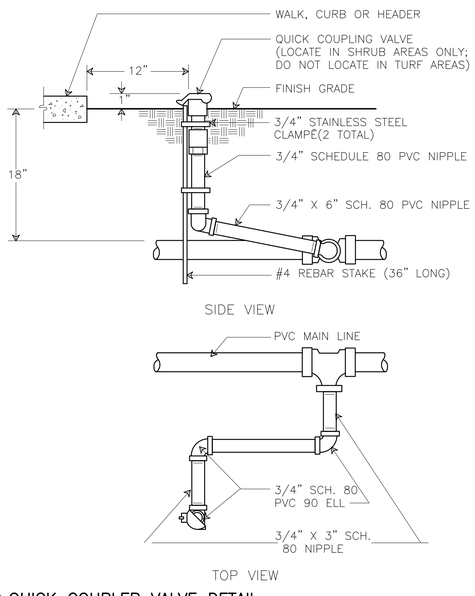

9 QUICK COUPLER VALVE DETAIL
NOT TO SCALE

NOTES:

PRESSURE REDUCER SHALL BE LINE SIZE WILKINS LEAD FREE 500XL–YSBR (INCLUDES PRESSURE REDUCER & FILTER), SEE IRRIGATION PLANS FOR INSTALLATION REQUIREMENTS.

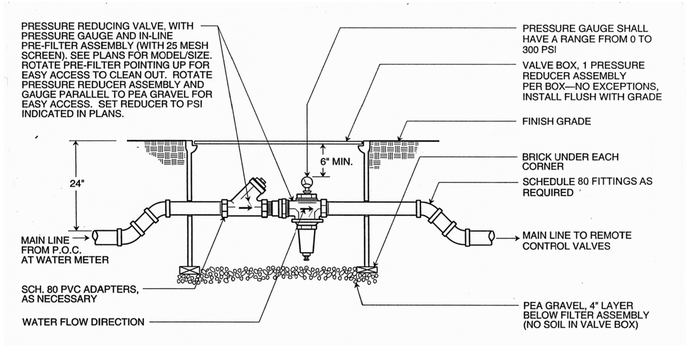

10 PRESURE REDUCER
NOT TO SCALE

CLIENT:
SUMMERHILL HOMES
777 SOUTH CALIFORNIA AVE.
PALO ALTO
CA
94304
TEL 650.842.2421

CALL BEFORE YOU DIG
811
USA
800.227.2600

LICENSED LANDSCAPE ARCHITECT
ZEKI R. ABED
Lic. No. 3402
Expires
STATE OF CALIFORNIA

VAN DORN ABED
LANDSCAPE ARCHITECTS, INC.
81 14TH ST. SAN FRANCISCO, CA
ZIP 94103 PH (415) 864-1921 FAX(415) 864-6796

COPYRIGHT © 2005 VAN DORN ABED LANDSCAPE ARCHITECTS, INC.
ALL DRAWINGS & WRITTEN MATERIAL APPEARING HEREIN CONSTITUTE ORIGINAL WORK OF THE ARCHITECT & SAME MAY NOT BE DUPLICATED, USED OR DISCLOSED WITHOUT WRITTEN CONSENT OF THE LANDSCAPE ARCHITECT.

PROJECT MANAGER: MW
DRAWN BY: BO
CHECKED BY:

PROJECT NAME/LOCATION:
RANCHO LAGUNA
MORAGA CA.

DRAWING TITLE:
LANDSCAPE CONSTRUCTION DRAWINGS

REVISIONS:

NO.	DESCRIPTION	BY:	DATE

SHEET TITLE:
IRRIGATION DETAILS

SCALE: AS SHOWN
ISSUE DATE: 02/27/15
PROJECT NO.: V1226
SHEET NO.: L4.12
39 OF 44

TORO-IRRIGATION DIVISION
5825 JASMINE STREET
RIVERSIDE, CA 92504
TOLL FREE: 1-877-345-8676
PHONE: (951) 785-3152
FAX: (951) 359-1870
www.toro.com

LEGEND

1. 1" ABOVE FINISH GRADE.
2. NATIVE SOIL PER SPECIFICATIONS.
3. FINISH GRADE.
4. TORO DL2000 FLUSH VALVE (FCH-H-FIPT).
5. 6" ROUND PLASTIC VALVE BOX . HEAT BRAND "FV" ON LID IN 1" HIGH CHARACTERS.
6. 3/4" SCH 80 PVC NIPPLE (LENGTH AS REQUIRED).
7. BRICK SUPPORTS (2 COMMON BRICKS REQUIRED).
8. PEA GRAVEL SUMP (6" x 18").
9. PVC TEE (SxSxT) WITH 3/4" THREADED OUTLET.
10. PVC PIPING.

NOTE:
USE ONE FLUSH VALVE FOR EVERY 7 GPM PER ZONE. LOCATE AT LOW POINTS. FLUSH RATE IS 0.8 GPM. FLUSH PRESSURE IS 2 PSI. REFER TO TORO PUBLICATION #ALT111 FOR SPECIFICATIONS.

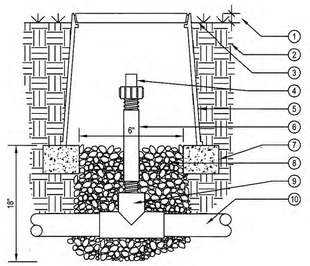

SECTION/ELEVATION
NOT TO SCALE

NOTES:
1. INSTALLATION TO BE COMPLETED IN ACCORDANCE WITH MANUFACTURERS SPECIFICATIONS.
2. DO NOT SCALE DRAWINGS.
3. CONTRACTORS NOTE: FOR PRODUCT AND COMPANY INFORMATION VISIT www.CADdetails.com/info REFERENCE NUMBER 065-188w.

1 DRIP CIRCUIT FLUSH VALVE DETAIL
NOT TO SCALE

TORO-IRRIGATION DIVISION
5825 JASMINE STREET
RIVERSIDE, CA 92504
TOLL FREE: 1-877-345-8676
PHONE: (951) 785-3152
FAX: (951) 359-1870
www.toro.com

LEGEND

1. 1" ABOVE FINISH GRADE.
2. NATIVE SOIL PER SPECIFICATIONS.
3. FINISH GRADE.
4. TORO DL2000 AIR/VACUUM RELIEF VALVE (YD-500-34).
5. 1/2" PVC COUPLING (TxT).
6. 6" ROUND PLASTIC VALVE BOX . HEAT BRAND "AR" ON LID IN 1" HIGH CHARACTERS.
7. 1/2" SCH 80 PVC NIPPLE (LENGTH AS REQUIRED).
8. BRICK SUPPORTS (2 COMMON BRICKS REQUIRED).
9. PEA GRAVEL SUMP (6" DEEP).
10. PVC ELL (SxT) WITH 1/2" THREADED OUTLET.
11. PVC PIPING.

NOTE:
USE ONE AIR/RELIEF VALVE FOR EVERY 7 GPM PER ZONE. LOCATE AT HIGH POINTS. REFER TO TORO PUBLICATION #ALT111 FOR SPECIFICATIONS.

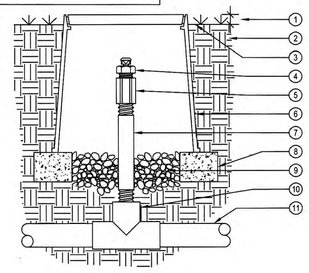

SECTION/ELEVATION
NOT TO SCALE

NOTES:
1. INSTALLATION TO BE COMPLETED IN ACCORDANCE WITH MANUFACTURERS SPECIFICATIONS.
2. DO NOT SCALE DRAWINGS.
3. CONTRACTORS NOTE: FOR PRODUCT AND COMPANY INFORMATION VISIT www.CADdetails.com/info REFERENCE NUMBER 065-188q.

2 DRIP CIRCUIT AIR VACUUM RELIEF VALVE DETAIL
NOT TO SCALE

TORO-IRRIGATION DIVISION
5825 JASMINE STREET
RIVERSIDE, CA 92504
TOLL FREE: 1-877-345-8676
PHONE: (951) 785-3152
FAX: (951) 359-1870
www.toro.com

LEGEND

1. FINISH GRADE.
2. TORO DL2000 DRIPLINE LATERAL .
3. TORO LOC-EZE TEE (FTT16).
4. TORO BLUE STRIPE POLY TUBING
5. TORO LOC-EZE X 1/2" MPT ADAPTER (FAM16).
6. PVC TEE (SxSxT) WITH 1/2" FPT OUTLET.
7. NATIVE SOIL BACKFILL PER SPECIFICATIONS.
8. DEPTH OF TUBING 3"-4"
9. DEPTH OF PVC SUPPLY LINE 12"

DL2000 DRIPLINE:
RPG212(12)-5/8" DIA. TUBING WITH 0.53GPH EMITTERS AT 12" O.C.

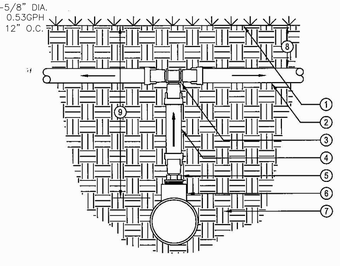

SECTION/ELEVATION
NOT TO SCALE

NOTES:
1. INSTALLATION TO BE COMPLETED IN ACCORDANCE WITH MANUFACTURERS SPECIFICATIONS.
2. DO NOT SCALE DRAWINGS.
3. CONTRACTORS NOTE: FOR PRODUCT AND COMPANY INFORMATION VISIT www.CADdetails.com/info REFERENCE NUMBER 065-188e.

3 DRIP CIRCUIT FEED MANIFOLD CONNECTION DETAIL
NOT TO SCALE

DRIP CIRCUIT NOTES (FOR DETAILS 1-6):

1. ALL DRIP TUBING SHALL BE INSTALLED 3"-4" BELOW GRADE.
2. ALL PVC LATERALS LINES, INCLUDING PVC FEED LINES SHALL BE INSTALLED 12" BELOW GRADE.
3. SEE IRRIGATION LEGEND FOR TUBING SPECIFICATIONS.
4. SEE NOTES AT EACH DRIP DETAIL FOR ADDITIONAL REQUIREMENTS.
5. CONTACT CHRIS STEELE, TORO IRRIGATION SPECIFICATION SALES MANAGER, 559-779-8676, PRIOR TO INSTALLATION OF DRIP TUBING TO REVIEW INSTALLATION REQUIREMENTS.

TORO-IRRIGATION DIVISION
5825 JASMINE STREET
RIVERSIDE, CA 92504
TOLL FREE: 1-877-345-8676
PHONE: (951) 785-3152
FAX: (951) 359-1870
www.toro.com

LEGEND

1. PVC LATERAL LINE FROM DRIP ZONE KIT.
2. TORO DL2000 AIR/VACUUM RELIEF VALVE (YD-500-34) PLUMBED TO PVC FLUSH MANIFOLD AT HIGH POINT.
3. PVC FLUSH MANIFOLD.
4. INLINE SPRING CHECK VALVE (JV0500-S2) TO HELP CONTROL LOW-HEAD DRAINAGE (TYP).
5. TORO DL2030 AIR/VACUUM RELIEF VALVE (YD-500-34) PLUMBED TO PVC FLUSH MANIFOLD JUST BELOW EACH CHECK VALVE (TYP).
6. TORO DL2030 DRIPLINE LATERAL (RGP-XXX-XX).
7. PVC SUPPLY MANIFOLD.
8. TORO DL2000 MANIFOLD-TO-ELBOW CONNECTION (TYP).
9. PERIMETER LATERALS 2" TO 4" FROM EDGE.
10. AREA PERIMETER.
11. TORO DL2000 OPERATION INDICATOR (DL-MP9), OPTIONAL.
12. TORO DL2000 AUTOMATIC FLUSH VALVE (FCH-H-FIPT) PLUMBED TO FLUSH MANIFOLD AT LOW POINT.

DL2000 DRIPLINE:
RPG212(12)-5/8" DIA. TUBING WITH 0.53GPH EMITTERS AT 12" O.C.

NOTE:
THE TOTAL LENGTH OF ALL INTERCONNECTED DRIP LINE SHALL NOT EXCEED THE MAXIMUM RUN LENGTH. SEE TORO SUBSURFACE IRRIGATION DESIGN GUIDE (FORM #ALT111).

HIGH POINT ON SLOPE
USE WHEN SLOPE EXCEEDS 3% IN DIRECTION OF FLOW

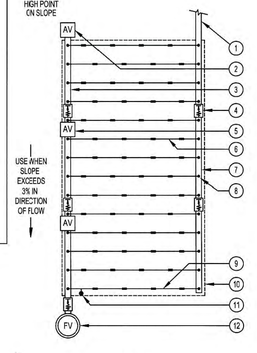

PLAN
NOT TO SCALE

NOTES:
1. INSTALLATION TO BE COMPLETED IN ACCORDANCE WITH MANUFACTURERS SPECIFICATIONS.
2. DO NOT SCALE DRAWINGS.
3. CONTRACTORS NOTE: FOR PRODUCT AND COMPANY INFORMATION VISIT www.CADdetails.com/info REFERENCE NUMBER 065-188l.

4 DRIP CIRCUIT LAYOUT - SLOPE DETAIL
NOT TO SCALE

TORO-IRRIGATION DIVISION
5825 JASMINE STREET
RIVERSIDE, CA 92504
TOLL FREE: 1-877-345-8676
PHONE: (951) 785-3152
FAX: (951) 359-1870
www.toro.com

LEGEND

1. PVC LATERAL LINE FROM DRIP ZONE KIT.
2. PVC SUPPLY MANIFOLD.
3. TORO DL2000 MANIFOLD-TO-ELBOW CONNECTION (TYP).
4. TORO DL2000 DRIPLINE LATERAL (RGP-XXX-XX).
5. TORO DL2000 AIR/VACUUM RELIEF VALVE (YD-500-34) PLUMBED TO TORO BLUE STRIPE POLY TUBING (EHD1645-XXX) AT EACH HIGH POINT.
6. AIR/VACUUM RELIEF LATERAL, TORO BLUE STRIPE POLY TUBING (EHD1645-XXX) CENTERED ON MOUND OR BERM.
7. PVC FLUSH MANIFOLD.
8. PERIMETER LATERALS 2" TO 4" FROM EDGE.
9. AREA PERIMETER.
10. TORO DL2000 OPERATION INDICATOR (DL-MP9), OPTIONAL.
11. TORO DL2000 AUTOMATIC FLUSH VALVE (FCH-H-FIPT) PLUMBED TO FLUSH MANIFOLD AT LOW POINT.

DL2000 DRIPLINE:
RPG212(12)-5/8" DIA. TUBING WITH 0.53GPH EMITTERS AT 12" O.C.

NOTE:
THE TOTAL LENGTH OF ALL INTERCONNECTED DRIP LINE SHALL NOT EXCEED THE MAXIMUM RUN LENGTH. SEE TORO SUBSURFACE IRRIGATION DESIGN GUIDE (FORM #ALT111).

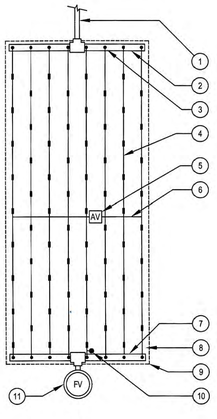

PLAN
NOT TO SCALE

NOTES:
1. INSTALLATION TO BE COMPLETED IN ACCORDANCE WITH MANUFACTURERS SPECIFICATIONS.
2. DO NOT SCALE DRAWINGS.
3. CONTRACTORS NOTE: FOR PRODUCT AND COMPANY INFORMATION VISIT www.CADdetails.com/info REFERENCE NUMBER 065-188h.

5 DRIP CIRCUIT LAYOUT - END FEED DETAIL
NOT TO SCALE

TORO-IRRIGATION DIVISION
5825 JASMINE STREET
RIVERSIDE, CA 92504
TOLL FREE: 1-877-345-8676
PHONE: (951) 785-3152
FAX: (951) 359-1870
www.toro.com

LEGEND

1. TORO DL2000 AUTOMATIC FLUSH VALVE (FCH-H-FIPT) PLUMBED TO FLUSH MANIFOLD AT LOW POINT.
2. PVC FLUSH MANIFOLD.
3. TORO DL2000 MANIFOLD-TO-ELBOW CONNECTION (TYP).
4. PVC LATERAL LINE FROM DRIP ZONE KIT.
5. PVC SUPPLY MANIFOLD.
6. TORO DL2000 MANIFOLD-TO-TEE CONNECTION.
7. TORO DL2000 DRIPLINE LATERAL (RGP-XXX-XX).
8. AIR/VACUUM RELIEF LATERAL, TORO BLUE STRIPE POLY TUBING (EHD1645-XXX) CENTERED ON MOUND OR BERM.
9. TORO DL2000 AIR/VACUUM RELIEF VALVE (YD-500-34) PLUMBED TO TORO BLUE STRIPE POLY TUBING (EHD1645-XXX) AT EACH HIGH POINT.
10. PERIMETER LATERALS 2" TO 4" FROM EDGE.
11. AREA PERIMETER.
12. TORO DL2000 OPERATION INDICATOR (DL-MP9), OPTIONAL.

DL2000 DRIPLINE:
RPG212(12)-5/8" DIA. TUBING WITH 0.53GPH EMITTERS AT 12" O.C.

NOTE:
THE TOTAL LENGTH OF ALL INTERCONNECTED DRIP LINE SHALL NOT EXCEED THE MAXIMUM RUN LENGTH. SEE TORO SUBSURFACE IRRIGATION DESIGN GUIDE (FORM #ALT111).

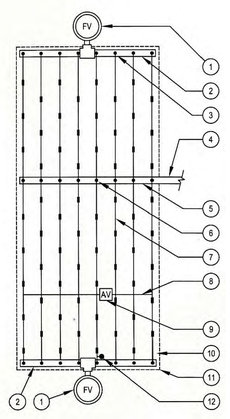

PLAN
NOT TO SCALE

NOTES:
1. INSTALLATION TO BE COMPLETED IN ACCORDANCE WITH MANUFACTURERS SPECIFICATIONS.
2. DO NOT SCALE DRAWINGS.
3. CONTRACTORS NOTE: FOR PRODUCT AND COMPANY INFORMATION VISIT www.CADdetails.com/info REFERENCE NUMBER 065-188g.

6 DRIP CIRCUIT LAYOUT - CENTER FEED DETAIL
NOT TO SCALE

TUBING LAYOUT CHART NOTES:

1. DO NOT EXCEED MAXIMUM TUBING RUN LENGTHS.
2. WHERE NECESSARY, INSTALL ADDITIONAL PVC LATERAL SUPPLY MANIFOLDS IN DRIP ZONE AREAS TO KEEP TUBING RUN LENGTHS FROM EXCEEDING MAX. RUN LENGTHS.
3. PVC LATERAL SUPPLY MANIFOLDS SHALL BE SAME SIZE AS LATERAL LINE SIZE THAT FEEDS ENTIRE DRIP ZONE AREA.

TORO DRIP TUBING MAXIMUM LENGHT OF RUN CHART

TUBING TYPE: TORO RGP-212(12); 5/8" DIA. TUBING WITH 0.53 GPH EMITTERS AT 12" O.C.

Performance Specifications (continued)

Maximum length of run

- RGP-212-XX:
  - 250' @ 15 psi (76m @ 1,03 Bar)
  - 360' @ 25 psi (110m @ 1,72 Bar)
  - 400' @ 30 psi (122m @ 2,07 Bar)
  - 460' @ 40 psi (140m @ 2.76 Bar)

7 DRIP CIRCUIT MAXIMUM TUBING LENGTH CHART
NOT TO SCALE

CLIENT:
SUMMERHILL HOMES
777 SOUTH CALIFORNIA AVE.
PALO ALTO
CA
94304
TEL 650.842.2421

CALL BEFORE YOU DIG
811
USA
800.227.2600

LICENSED LANDSCAPE ARCHITECT
ZEKI R. ABED
Lic. No. 3402
Expires
STATE OF CALIFORNIA

VAN DORN ABED
LANDSCAPE ARCHITECTS, INC.
81 14TH ST. SAN FRANCISCO, CA
ZIP 94103 PH (415) 864-9921 FAX(415) 864-6796

COPYRIGHT © 2005 VAN DORN ABED LANDSCAPE ARCHITECTS, INC.
ALL DRAWINGS & WRITTEN MATERIAL APPEARING HEREIN CONSTITUTE ORIGINAL WORK OF THE ARCHITECT & SAME MAY NOT BE DUPLICATED, USED OR DISCLOSED WITHOUT WRITTEN CONSENT OF THE LANDSCAPE ARCHITECT.

PROJECT MANAGER: MW
DRAWN BY: EO
CHECKED BY:

PROJECT NAME/LOCATION:
RANCHO LAGUNA
MORAGA CA.

DRAWING TITLE:
LANDSCAPE CONSTRUCTION DRAWINGS

REVISIONS:

NO.	DESCRIPTION	BY:	DATE

SHEET TITLE:
IRRIGATION DETAILS

SCALE: AS SHOWN
ISSUE DATE: 02/27/15
PROJECT NO.: V1226
SHEET NO.: L4.13
40 OF 44

TORO

TORO-IRRIGATION DIVISION
5825 JASMINE STREET
RIVERSIDE, CA 92504
TOLLFREE: 1-877-345-8676
PHONE: (951) 785-3152
FAX: (951) 359-1870
www.toro.com

LEGEND

1. TORO DL2000 AUTOMATIC FLUSH VALVE (FCH-H-FIPT) PLUMBED TO FLUSH MANIFOLD AT LOW POINT.
2. PVC FLUSH MANIFOLD.
3. TORO DL2000 OPERATION INDICATOR (DL-MP9), OPTIONAL.
4. TORO DL2000 MANIFOLD-TO-ELBOW CONNECTION (TYP).
5. TORO D..2000 DRIPLINE LATERAL. (RGP-XXX-XX).
6. AREA PERIMETER.
7. PERIMETER LATERALS 2' TO 4' FROM EDGE.
8. PVC LATERAL LINE FROM DRIP ZONE KIT.
9. TORO LOC-EZE TEE (FTT16).
10. PVC SUPPLY MANIFOLD.
11. TORO DL2000 AIR/VACUUM RELIEF VALVE (YD-500-34) PLUMBED TO SUPPLY MANIFOLD AT HIGH POINT.

NOTE:
THE TOTAL LENGTH OF ALL INTERCONNECTED DRIP LINE SHALL NOT EXCEED THE MAXIMUM RUN LENGTH. SEE TORO SUBSURFACE IRRIGATION DESIGN GUIDE (FORM #ALT111).

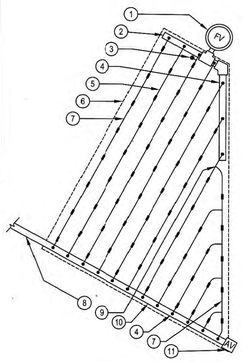

DL2000 DRIPLINE:
RPG212(12)-5/8" DIA.
TUBING WITH 0.53GPH
EMITTERS AT 12" O.C.

PLAN
NOT TO SCALE

DRIP CIRCUIT NOTES (FOR DETAIL 1):

1. ALL DRIP TUBING SHALL BE INSTALLED 3"-4" BELOW GRADE.
2. ALL PVC LATERALS LINES, INCLUDING PVC FEED LINES SHALL BE INSTALLED 12" BELOW GRADE.
3. SEE IRRIGATION LEGEND FOR TUBING SPECIFICATIONS.
4. SEE NOTES AT EACH DRIP DETAIL FOR ADDITIONAL REQUIREMENTS.
5. CONTACT CHRIS STEELE, TORO IRRIGATION SPECIFICATION SALES MANAGER, 559-779-8676, PRIOR TO INSTALLATION OF DRIP TUBING TO REVIEW INSTALLATION REQUIREMENTS.

NOTES:
1. INSTALLATION TO BE COMPLETED IN ACCORDANCE WITH MANUFACTURERS SPECIFICATIONS.
2. DO NOT SCALE DRAWINGS.
3. CONTRACTORS NOTE: FOR PRODUCT AND COMPANY INFORMATION VISIT www.CADdetails.com/Info REFERENCE NUMBER 065-188.

1 DRIP CIRCUIT ODD SHAPE LAYOUT – END FEED DETAIL
NOT TO SCALE

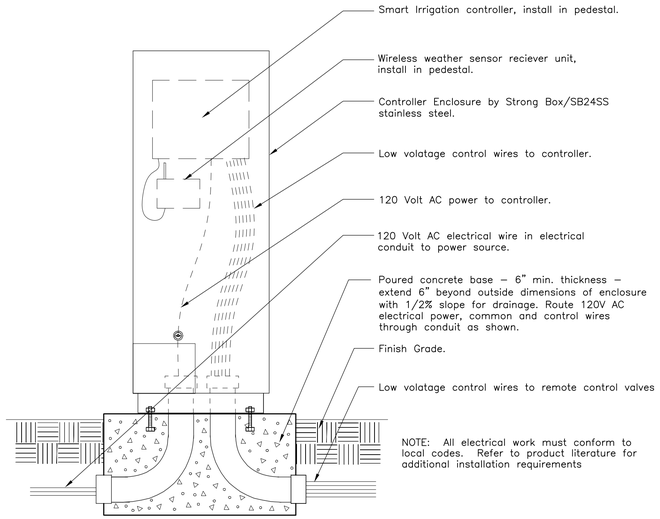

NOTE: All electrical work must conform to local codes. Refer to product literature for additional installation requirements

2 PEDESTAL MOUNT IRRIGATION CONTROLLER "A" DETAIL
NOT TO SCALE

CL-W1 Wireless Weather Sensor

1 – Weather Sensor Test Pin
Pressed to simulate rain sensor operation and test communication.
2 – Rain Sensor Adjustment Cap
Adjusts Rain Sensor threshold to a nominal setting of 1/8", 1/4", 1/2" or 3/4" (3 mm, 6 mm, 12 mm or 19 mm) of accumulated rainfall.
3 – Solar Collector
Collects and measures solar radiation. Requires full exposure to sunlight.
4 – Battery Compartment
Factory-installed 9V-Alkaline battery can sustain normal Weather Sensor operations up to five years.
5 – QuickClip™ Mounting Bracket
Convenient QuickClip mounting bracket provides quick and easy Weather Sensor installation.
6 – Temperature Sensor (not shown)
7 – RF Transmission LED (not shown)
8 – Antenna Wire

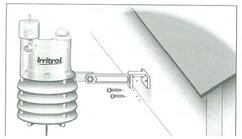

NOTES:
1. INSTALL WEATHER SENSOR PER MANUFACTURERS SPECIFICATIONS.
2. INSTALL SENSOR OF EDGE OF ROOF IN AREA WITH FULL SUN EXPOSURE, IN LOCATION APPROVED BY OWNER'S REPRESENTATIVE.
3. DO NOT LOCATE SENSOR WERE THERE IS SHADE, OR UNDER TREES, OR UNDER EVAE OF BLDG.

3 WEATHER SENSOR DETAIL
NOT TO SCALE

8-OUTLET DRIP EMITTER AREA LATERAL PIPE SIZING CHART

GPM FLOW RATES	SIZE OF CLASS 200 PVC PIPE	MAX. QUANTITY OF 8-OUTLET EMITTER UNITS WITH 1.0 GPH EMITTERS
5 to 8	3/4"	60
9 to 14	1"	104
15 to 24	1-1/4"	176
25 to 34	1-1/2"	254

GPM FLOW RATES	SIZE OF CLASS 200 PVC PIPE	MAX. QUANTITY OF 8-OUTLET EMITTER UNITS WITH 2.0 GPH EMITTERS
5 to 8	3/4"	30
9 to 14	1"	52
15 to 24	1-1/4"	88
25 to 34	1-1/2"	127

NOTE: CONTRACTOR SHALL BE RESPONSIBLE FOR SIZING LATERAL LINES AT DRIP AREAS, BASED UPON QUANTITY OF EMITTERS/FLOW RATES AT EACH LATERAL DRIP LINE. DO NOT EXCEED MAXIMUM FLOW RATES SHOWN FOR EACH PIPE SIZE. IF CIRCUITS REQUIRE HIGHER FLOWS THAN SHOWN ABOVE CONTRACTOR SHALL ADD A NEW REMOTE CONTROL VALVE.

IRRITROL 700 SERIES RCV SIZING CHART

MAX. GPM FLOW RATES	SIZE OF CLASS IRRITROL 700 SERIES RCV
0 to 10	3/4"
11 to 20	1"
21 to 35	1-1/2"

NOTE: DO NOT EXCEED 35 GPM AT RCV. CONTRACTOR SHALL BE RESPONSIBLE FOR SIZING RCV'S AT DRIP AREAS, BASED UPON QUANTITY OF EMITTERS/FLOW RATES AT EACH LATERAL DRIP LINE. DO NOT EXCEED MAXIMUM FLOW RATES SHOWN FOR RCV SIZE. IF CIRCUITS REQUIRE HIGHER FLOWS THAN MAXIMUM GPM PERMITTED, CONTRACTOR SHALL ADD A NEW REMOTE CONTROL VALVE TO CREATE TWO ZONES WITH LOWER FLOWS.

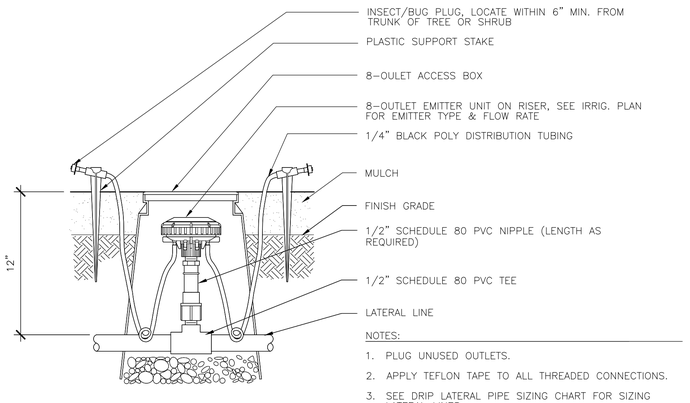

NOTES:
1. PLUG UNUSED OUTLETS.
2. APPLY TEFLON TAPE TO ALL THREADED CONNECTIONS.
3. SEE DRIP LATERAL PIPE SIZING CHART FOR SIZING LATERAL LINES.
4. 1/4" DISTRIBUTION TUBING MAXIMUM LENGTH SHALL NOT EXCEED 20'.
5. ALL DRIP COMPONENTS (FITTINGS, TUBING, PLUGS, STAKES, BOXES, ETC.) SHALL BE FROM SAME MANUFACTURER AS 8-OUTLET DRIP EMITTER UNIT.

SECTION

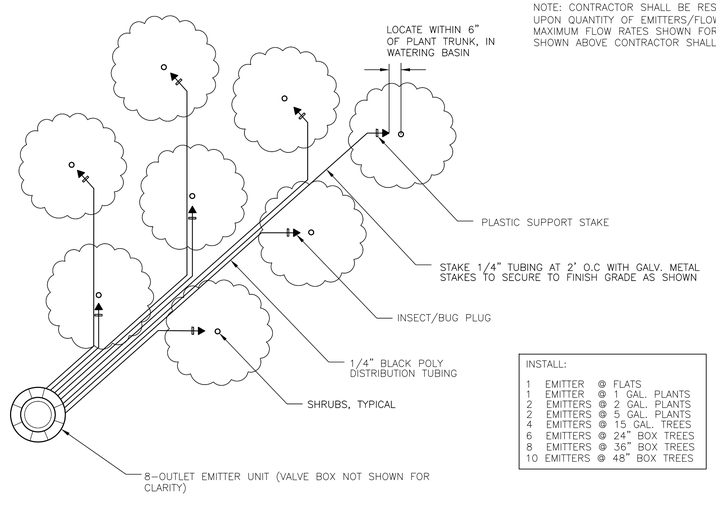

INSTALL:

1	EMITTER @ FLATS
1	EMITTER @ 1 GAL. PLANTS
2	EMITTERS @ 2 GAL. PLANTS
2	EMITTERS @ 5 GAL. PLANTS
4	EMITTERS @ 15 GAL. TREES
6	EMITTERS @ 24" BOX TREES
8	EMITTERS @ 36" BOX TREES
10	EMITTERS @ 48" BOX TREES

PLAN VIEW: 8-OUTLET EMITTER LAYOUT @ SHRUBS/GROUND COVERS

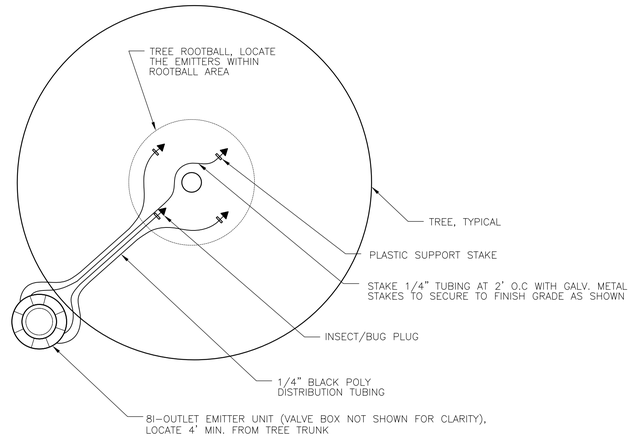

PLAN VIEW: 8-OUTLET LAYOUT @ TREES

4 8-OUTLET DRIP EMITTER ON RISER DETAIL
NOT TO SCALE

CLIENT:
SUMMERHILL HOMES
777 SOUTH CALIFORNIA AVE.
PALO ALTO
CA
94304
TEL 650.842.2421

CALL BEFORE YOU DIG
811
800.227.2600

LICENSED LANDSCAPE ARCHITECT
ZEKI R. ABED
Lic. No. 3402
Expires
STATE OF CALIFORNIA

VAN DORN ABED
LANDSCAPE ARCHITECTS, INC.
81 14TH ST. SAN FRANCISCO, CA
ZIP 94103 PH (415) 864-1921 FAX(415) 864-6796

COPYRIGHT © 2006 VAN DORN ABED LANDSCAPE ARCHITECTS, INC.
ALL DRAWINGS & WRITTEN MATERIAL APPEARING HEREIN CONSTITUTE ORIGINAL WORK OF THE ARCHITECT & SAME MAY NOT BE COPIED, USED OR DISCLOSED WITHOUT WRITTEN CONSENT OF THE LANDSCAPE ARCHITECT.

PROJECT MANAGER: MW
DRAWN BY: EO
CHECKED BY:

PROJECT NAME/LOCATION:
RANCHO LAGUNA
MORAGA CA.

DRAWING TITLE:
LANDSCAPE CONSTRUCTION DRAWINGS

REVISIONS: NO.	DESCRIPTION:	BY:	DATE

SHEET TITLE:
IRRIGATION DETAILS

SCALE: AS SHOWN
ISSUE DATE: 02/27/15
PROJECT NO.: V1226
SHEET NO.: L4.14
41 OF 44

IRRIGATION NOTES:

1. Irrigation system shall be installed in conformance with all applicable local codes and ordinances by experienced workmen and a licensed Landscape Contractor who shall obtain all necessary permits and pay all required fees.
2. Prior to the start of construction, the Contractor shall verify with the City, Water District, and/or other governing agency(s) if a reclaimed water source will be available in the future for connection to the irrigation system. If local regulations so stipulate, then the Contractor shall follow all requirements, specifications, construction details, codes, etc., for the installation of irrigation systems utilizing reclaimed water sources for irrigation of landscaping.
3. The Contractor shall be responsible for any damage to existing facilities caused by or during the performance of his work. All repairs shall be made at no cost to the Owner.
4. This design is diagrammatic; install parallel lines in a common trench with minimum horizontal distance of 4" and lines not one above the other. Snake pipe in trenches. All piping, valves, etc., shown within paved areas is for design clarification only and shall be installed in planting areas where possible. Avoid any conflicts between the irrigation system, planting and architectural features.
5. Do not willfully install the irrigation system as shown on the drawings when it is obvious in the field that obstructions, grade differences or differences in the area dimensions exist that might not have been considered in the engineering. Such obstructions or differences should be brought to the attention of the Owner's authorized representative. In the event this notification is not performed, the Contractor shall assume full responsibility for any revisions necessary.
6. It is the responsibility of the Contractor to familiarize himself with all grade differences, location of walls, retaining walls etc. He shall coordinate his work with the General Contractor and other Subcontractors for the location and the installation of pipe sleeves through walls, under roadways, paving, structures, etc.
7. Due to the scale of the drawings, it is not possible to indicate all offsets, fittings, sleeves, etc., which may be required. The Contractor shall carefully investigate the structural and finished conditions affecting all of his work and plan his work accordingly, furnishing such fittings, etc., as may be required to meet such conditions. Drawings are generally diagrammatic and indicative of the work to be installed. The work shall be installed in such a manner as to avoid conflicts between irrigation system, planting, and architectural features..
8. Notify Landscape Architect of any other aspects of layout which will provide incomplete or insufficient water coverage of plant material and do not proceed until his instructions are obtained.
9. Sprinklers located where low head drainage will cause erosion and excess water run-off, use pop-up bodies with an integral check valve, and shrub risers with King Bros. CV series check valve in lieu of Schedule 80 coupling.
10. Electrical Contractor to supply 120 volt A.C. (2.5 AMP) service to controller location. Contractor to make final connection from electrical stub-out to controller. Paint conduit to controller with 2 coats Rustoleum brown paint if installed outdoors; color to be approved by Owner's representative. 120 volt A.C. J-Box to controller by others. All 120 volt A.C. and 24 volt connections to be made by Contractor.
11. Each controller shall have its own independent ground wire.
12. Program irrigation controller(s) to operate between the hours of 10:00 P.M. and 7:00 A.M.
13. Valve locations shown are diagrammatic. Install in ground cover/shrub areas where possible (not in lawn area).
14. Install valve boxes 12" from and perpendicular to walk, curb, lawn, building or landscape feature. At multiple valve box groups, each box shall be an equal distance from the walk, curb, lawn, etc., and each box shall be 12" apart. Short side of valve box shall be parallel to walk, curb, lawn, etc.
15. Install U.L. approved direct-burial wire #14 minimum and #14 common ground at 16" depth minimum. Splicing of 24 volt wires will not be permitted except in valve boxes. Leave a 24" coil of excess wire at each splice and 100 feet on center along wire run. Tape wire in bundles 10 feet on center. No taping permitted inside sleeves.
16. Install controller wiring as specified on the irrigation plans.
17. Prior to trenching, call Underground Service Alert, 1-800-642-2444 to locate all cables, conduits, and other utilities and take proper precautions not to damage or disturb existing utilities.
18. All Main lines and Lateral lines under paving shall be in PVC sleeves which extend 12" into planting areas. All backfill shall be free of rocks greater than 1" diameter. For ring-tite PVC main line piping inside sleeves use 1120-315 PSI PVC plastic pipe with schedule 40 PVC couplings.
19. When applicable, in podium projects, Schedule 80, ASTM D2466 male adapters to be used where mainline connects to copper pipe service lines installed by others.
20. Copper pipe shall be joined to steel or cast iron pipe with a dielectric union.
21. In addition to the sleeves and conduits shown on the plans the Contractor shall be responsible for the installation of sleeves and conduits of sufficient size under all paved areas.
22. Locate quick coupling valve 12" from hardscape area.
23. The irrigation system design is based on the minimum operating Pressure (PSI) and Flow (GPM) shown on the irrigation drawings (see Irrigation Demand at P.O.C.). The Contractor shall verify the Static and Dynamic water pressure (PSI) and Flow Rate (GPM) at the point of connection (P.O.C.) prior to construction as follows:
    A. Static Pressure: take PSI reading at P.O.C. with no water flowing.
    B. Dynamic Pressure: install at P.O.C. a pressure (PSI) and flow gauge (GPM) assembly of suitable size* to take flow (GPM) readings in the range of the stated Irrigation Demand for the irrigation system design. Open valve or meter at P.O.C. until GPM flow reading equals or exceeds irrigation GPM demand. Note dynamic pressure and flow readings. If the GPM flow does not equal or exceed the GPM demand, note highest flow reading possible.
    C. Readings shall be taken at the following times: 1PM, 5PM, 9PM, 1AM, 5AM, 9AM.
    * irrigation systems with high irrigation demand GPM flow rates, will require large capacity test gauge assemblies.

    Submit to Owner's Representative and Landscape Architect results of Pressure and Flow Tests prior to beginning work. Note any discrepancies of 10 PSI or more or flow rates lower than stated Irrigation Demand on plans to Owner's Representative and Landscape Architect. If there are discrepancies of 10 PSI or more or flow rates lower than stated Irrigation Demand on plans, system may not perform correctly - do not proceed with irrigation system installation until corrective measures are determined. Note, Contractor shall be responsible for any corrective measures required to the irrigation system, at no additional cost to the Owner, if irrigation system is installed without required tests, and discrepancies in Pressure and Flow at the P.O.C. are discovered that prevent the irrigation system from functioning correctly.
24. Meter(s) indicated on the Drawing(s) is supplied and installed by others, unless otherwise indicated. The Contractor is responsible for furnishing all proper fittings.
25. All irrigation piping shall be subjected to hydrostatic pressure tests as follows before backfilling trenches: Valves, pumps, and accurately calibrated recording gauges shall be installed in at least two places. Supply lines shall be tested at 125 psi for at least 4 hours with an allowable loss of 5 psi. Laterals lines shall be tested at the existing static psi for at least 1 hour with an allowable loss of 5 psi. Any leaks shall be corrected and piping re-tested until the system meet the requirements. The Contractor shall notify the Owner's Representative at least 3 days in advance of the time that the irrigation system piping is to be tested. Submit written test results to Owner's Representative and Landscape Architect.
26. Contractor to notify all local jurisdictions for inspection and testing of installed backflow prevention device.
27. The entire irrigation system shall be operating properly before any lawn or ground cover is planted.
28. The Contractor shall provide Owner with a clean set of marked prints of "RECORD DRAWINGS" drawings. Reference all trenches, valves, controllers, splice boxes, quick couplers, backflow preventers, water meters, with dimensions to nearest building or paving.
29. See notes on irrigation plans for additional requirements.
30. The Contractor shall guarantee the irrigation system will be free of defects of workmanship and materials for a period of one year. All repairs necessary shall be made at no cost to the Owner, with the exception of repairs and labor cost made necessary by vandalism.

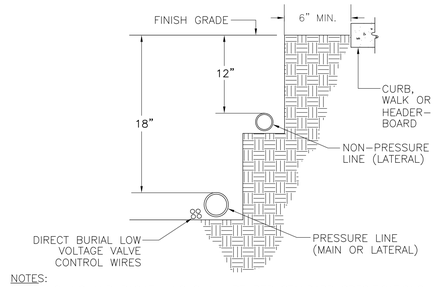

NOTES:
1. TRENCHING AND BACKFILLING SHALL BE PER STANDARD SPECIFICATIONS.
2. MINIMUM BACKFILL RELATIVE COMPACTION SHALL BE 90%.
3. BUNDLE CONTROL WIRES TOGETHER AND TAPE AT 10' INTERVALS.
4. 4" MIN. HORIZONTAL DISTANCE BETWEEN PIPES IN COMMON TRENCH.
5. ALL PLASTIC IRRIGATION PIPING TO BE SNAKED IN TRENCHES.

1 IRRIGATION LINE TRENCHING
NOT TO SCALE

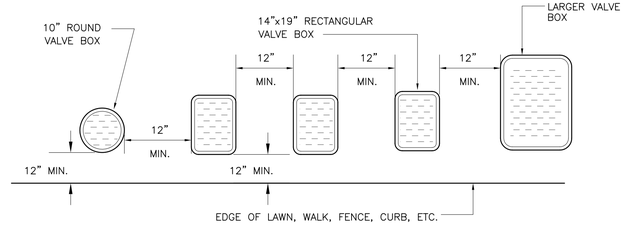

TOP VIEW

NOTES
1. CENTER BOX OVER VALVE TO FACILITATE SERVICING VALVE.
2. SET BOXES 1" ABOVE FINISH GRADE OR MULCH COVER IN GROUND COVER/SHRUB AREA AND FLUSH WITH FINISH GRADE IN TURF AREA.
3. SET VALVE BOX ASSEMBLY IN GROUND COVER/SHRUB AREA WHERE POSSIBLE. INSTALL IN LAWN AREA ONLY IF GROUND COVER/SHRUB AREA DOES NOT EXIST ADJACENT TO LAWN.
4. SET BOXES PARALLEL TO EACH OTHER AND PERPENDICULAR TO EDGE.
5. AVOID HEAVILY COMPACTING SOIL AROUND VALVE BOX EDGES TO PREVENT COLLAPSE AND DEFORMATION OF VALVE BOX SIDES.
6. VALVE BOXES SHALL HAVE BOLT DOWN LIDS WITH BOLTS INSTALLED.
7. VALVE BOXES SHALL BE BY CARSON, OR EQUIVALENT.

2 VALVE BOX LAYOUT DETAIL
NOT TO SCALE

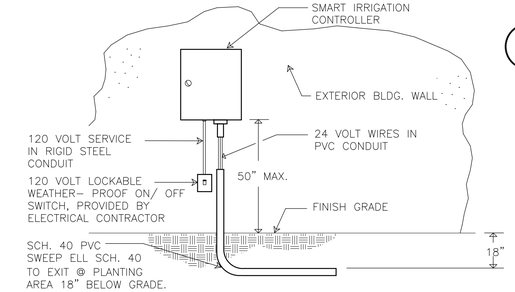

NOTE: CONTRACTOR TO COORDINATE AND INSTALL 120 VOLT POWER FROM BUILDING TO IRRIGATION CONTROLLER

3 WALL MOUNT CONTROLLER "B" DETAIL (AT PRIVATE YARDS AREAS ONLY)
NOT TO SCALE

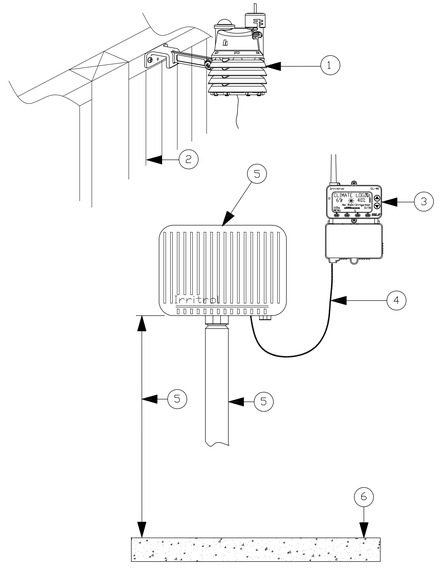

1. Climate Logic™ weather sensor.
2. Fence. Install Climate Logic™ weather sensor at top of fence with stainless steel screws.
3. Climate Logic™ receiver module – mount in controller pedestal assembly, see irrigation controller "A" detail.1. Connect to controller with supplied cord.
4. Single connection cord plugged into controllers remote port.
5. Irrigation controller – mount in controller pedestal assembly, see irrigation controller "A" detail.
6. Finish Surface of interior or exterior space where controller is located.

NOTES:
1. All electrical work must conform to local codes. Refer to product literature for additional installation requirements.
2. Locate sensor on roof edge or roof gutter in area open to sky with full sun exposure. Sensor mounting location shall be approved by Owner's Representative.

CLIMATE LOGIC
weather–sensing system connected to controller

4 WIRELESS WEATHER SENSOR DETAIL (AT PRIVATE YARDS AREAS ONLY)
NOT TO SCALE

CLIENT:
SUMMERHILL HOMES
777 SOUTH CALIFORNIA AVE.
PALO ALTO
CA
94304
TEL 650.842.2421

CALL BEFORE YOU DIG
811
800.227.2600

LICENSED LANDSCAPE ARCHITECT
ZEKI R. ABED
Lic. No. 3402
Expires
STATE OF CALIFORNIA

VAN DORN ABED
LANDSCAPE ARCHITECTS, INC.
81 14TH ST. SAN FRANCISCO, CA
ZIP 94103 PH (415) 864-1921 FAX(415) 864-6796

COPYRIGHT © 2006 VAN DORN ABED LANDSCAPE ARCHITECTS, INC.
ALL DRAWINGS & WRITTEN MATERIAL APPEARING HEREIN CONSTITUTE ORIGINAL UNPUBLISHED WORK OF THE ARCHITECT & SAME MAY NOT BE DUPLICATED, USED OR DISCLOSED WITHOUT THE WRITTEN CONSENT OF THE LANDSCAPE ARCHITECT.

PROJECT MANAGER: MW
DRAWN BY: BD
CHECKED BY:

PROJECT NAME/LOCATION:
RANCHO LAGUNA
MORAGA CA.

DRAWING TITLE:
LANDSCAPE CONSTRUCTION DRAWINGS

REVISIONS:

NO.	DESCRIPTION	BY:	DATE

SHEET TITLE:
IRRIGATION SPECIFICATIONS & DETAILS

SCALE: AS SHOWN
ISSUE DATE: 02/27/15
PROJECT NO.: V1226
SHEET NO.: L4.15
42 OF 44

GENERAL NOTES:

1. Contractor shall verify all existing site conditions prior to beginning construction. Notify Owner's Representative of any discrepancies.

2. The Contractor shall provide all materials, labor and equipment to complete all landscape work as shown on the plans and specifications.

3. If there is a conflict with the utilities and the planting, the Owner's Representative is to be responsible for spotting new plant locations prior to the planting process.

4. The Contractor shall be responsible for any damage to existing utilities, pavement or improvements. All repairs shall be made at no expense to the Owner.

5. The Contractor shall notify the Owner's Representative prior to beginning construction and shall keep the Owner's Representative informed of progress of work throughout landscape construction.

6. All work shall be installed in conformance with all applicable local codes and ordinances by experienced workmen and a licensed Contractor who shall obtain all necessary permits and pay all required fees.

7. Any requirement in the Plans and / or Notes and Specifications shall be considered binding. In case of discrepancies, the Owner's Representative shall be contacted immediately

8. There shall be regular site visits by the Owner's Representative/Landscape Architect throughout landscape construction. A site review to begin maintenance period, and final site review will be required.

9. Execute weekly cleaning of the site throughout the contract period to remove all waste materials, rubbish, plant containers, etc.

10. See Civil Engineer's improvement plans for all general grading information and notes.

11 All written dimensions supersede scaled distances. All dimensions are taken from back of curb, face of building, face of wall finish or face of fence.

12. Upon award of bid and prior to any construction, the Contractor shall perform the Percolation and Soils Testing as specified in the Planting Notes, if these tests have not already been performed. If drainage is found to be insufficient, or soils test results identify conditions requiring extraordinary or corrective measures, the Contractor shall immediately alert the Owner's Representative and Landscape Architect of any such problems, for corrective action and/or additional drainage treatment.

GRADING NOTES:

1. See General Notes and Civil Engineer's Grading Plans for additional information.

2. Rough grading and site drainage shall have been completed prior to Contractor's work. Verify all existing site conditions and report any discrepancies to Owner's Representative.

3. Contractor shall be responsible for finish grading. Verify positive drainage at a minimum 2% slope in landscape areas away from buildings and 1% on paved surfaces. Shrub & ground cover areas shall be 1-1/2" and lawn areas 1" below top of adjacent paving, headers, or curbs. No low spots which hold standing water will be permitted.

4. All salvageable, clean top soil from areas to be paved shall be stockpiled to be used as fill in planting areas

PLANTING NOTES:

1. See General Notes.

2. Submittals: Contractor shall submit the following items to Owner's Representative and Landscape Architect for review/approval prior to beginning planting installation operations:
   A. Soils test reports per Notes 5.B (initial site soils test) & 5.E (post amendment installation test) below.
   B. Vendor data for landscape products, including: bark mulch, root barriers, fertilizers, soil amendments, and soil conditioners.
   C. Written results of percolation tests per Note 6.D below.

3. The Contractor shall verify the availability of all landscape plants within 10 days following award of the contract. Discrepancies or other problems and all plant substitutions shall be resolved at this time. If a substitute is authorized by the Owner's Representative, it must be of the same size, value and quality as the original plant.

4. All trees and representative samples of shrubs/ground covers shall be inspected at the site for approval by the Owner's Representative and meet the following standards:

   A. Quality and size shall conform to the State of California Grading Code of Nursery Stock, No. 1 grade and to the current issue of the American Standard for Nursery Stock published by the American Association of Nurserymen. Use only nursery-grown stock. The Owner's Representative will inspect plants for approval prior to any installation.

   B. Plant material must be selected from nurseries that have been inspected by state or federal agencies.

   C. Nomenclature will be in accordance with Hortus III.

   D. Plant materials will not be accepted that are overgrown, root-bound, or too recently canned so that the root system is not thoroughly established throughout the can. Pruning shall not be done prior to delivery except as authorized by the Owner's Representative.

5. Grading and Topsoil:

   A. See Grading Notes.

   B. Soil Test: Contractor shall submit three (3) representative soil samples to Soil and Plant Laboratory, Santa Clara or approved equal to be tested for agricultural suitability and fertility with pre-plant and post-plant recommendations, immediately following the completion of rough grading. Soil samples shall be taken from location determined by the Owner's Representative. Soil shall be certified as clean and free of hazardous material or waste contamination. Notify Owner's Representative of any soils problems noted in the soils test report that could potentially affect/impact plant health, including but not limited to the following: high or low soil pH, poor soil drainage, excessive soil compaction, different soil types in the same test sample, deficient or excess nutrient levels, high salt levels, high boron or other elements and compounds toxic to plants, etc. Submit report to Landscape Architect and Owner's Representative for review and approval prior to beginning work. Do not proceed with any amending operations until soils report has been reviewed and approved. (See Note 5.E below for “Post Amendment Installation Soil Testing for Compliance” requirements - this soils test report for compliance must be submitted to Landscape Architect and Owner's Representative for review and approval prior to beginning planting operations).

   C. Soil amendment to be added as follows in all planting areas:

   Amount per 1000 square feet:
   6 cubic yards Nitrogen stabilized sawdust

   20 lbs. 6-20-20 fertilizer (Best's Cropmaker)

   10 lbs. 0-25-0 Single super phosphate

   10 lbs. Iron sulfate

   (Applied rates of soil amendment and commercial fertilizer shall be used for bidding purpose until determined by soil tests)

   (See Note 5.E below for “Post Amendment Installation Soil Testing for Compliance” requirements - this soils test report for compliance must be submitted to Landscape Architect and Owner's Representative for review and approval prior to beginning planting operations).

   D. Soil amendment in all planting areas shall be uniformly spread and thoroughly incorporated to a soil depth of 6” minimum by repeated rotary hoe cultivation prior to planting.

   E. Post Amendment Installation Soil Testing for Compliance: After incorporating amendments, fertilizers and conditioners, Contractor shall take three (3) representative soil samples and have samples tested for Agricultural Suitability and Fertility by an approved soils analysis laboratory for compliance with original soil test report recommendations. Add any additional amendments, fertilizers and conditioners recommended by soils analysis laboratory at no cost to Owner. Notify Owner's Representative of any potential soils problems noted in the report. Submit report for amendment/fertilizer/conditioner compliance to Landscape Architect and Owner's Representative prior to beginning planting operations.

6. Tree and Shrub Planting:

   Prior to digging holes for final planting, the Contractor shall spot all trees as shown on the Drawings for approval by the Landscape Architect.

   A. Soil amendments and fertilizer shall have been incorporated into the soil prior to tree and shrub planting.

   B. Dig pits as shown on Drawings.

   C. After pits are dug, break sides and bottom of holes to open wall of pit for root penetration.

   D. Percolation Test: All plant pits shall be tested for sufficient drainage prior to planting. Representative plant pits shall be dug (at least 2) at site upon award of Bid to test for general site subgrade drainage conditions. Individual planting pits shall also be tested again for sufficient drainage prior to planting. Contractor shall fill plant pits with water, to see if subsoil conditions will cause retention of water within plant pits overnight. If standing water is still observed after 12 hours, then Contractor shall alert Owner's Representative and Landscape Architect of the problem.

   Planting backfill mix for trees and shrubs shall be:
   Amount per Cubic Yard:

   3/4 cubic yard On site soil

   1/4 cubic yard Nitrogen stabilized sawdust

   1.5 lbs. 6-20-20 fertilizer (Best's Cropmaker)

   2.5 lbs. 0-25-0 Single super phosphate

   1 lb. Iron sulfate

   (Applied rates of soil amendment and commercial fertilizer shall be used for bidding purpose until determined by soil tests)

   E. Fertilize plants at the time of planting with Agriform 21-gram fertilizer packets, 20-10-5: 2 per 1 gallon can; 3 per 5 gallon can; 8 per 15 gallon can; 15 per tree.

   F. Plants shall be erect after planting, and staked or guyed as detailed at the time of planting. Remove nursery stakes.

   G. Rootball crown shall be 1-1/2” for trees, 1" for shrubs above finish grade after watering and settling.

   H. Tree and shrub plantings shall be watered and flooded to eliminate air pockets within 2 hours of the time of planting.

   I. All vines shall be trained to posts, fences or walls by tying select individual branches with plastic covered wire ties as follows: ties shall be attached to wood surfaces with 3/4” galvanized iron staples and attached to stucco or masonry surfaces with epoxy as recommended by manufacturer. See planting details.

   J. All trees shall be planted 10'-0” minimum from buildings including overhangs and 5'-0” minimum from curbs, paving, fences, etc. Orient main branches of trees away from building. Should any discrepancies occur between field conditions and planting plans contact Owner's Representative. All trees closer than 5'-0” from curbs, foundations, sidewalks, or other hardscape items, shall be installed with linear root deflector panels protecting adjacent hardscape items, but never fully surrounding rootball. Install a 10 foot by 24 inch deep section of linear interlocking root deflector panels, centered on tree (5 feet on each side), located at curb, foundation, sidewalks, other hardscape items, unless otherwise indicated. See plans for detail.

   K. All trees shall be planted a minimum of 5'-0” away from storm drain, or other underground utility lines (or per code), and 10'-0” away from sanitary sewer lines (or per code), and 15'-0” minimum away from utility poles or light standards (or per code).

   L. All trees and shrubs planted in ground cover areas shall have watering basins around them. Basin diameters shall be the same size as the tree or shrub's rootball. Basins shall be formed with level bottoms and 3 inch high walls. Basins shall receive 2” depth of bark mulch unless otherwise indicated. Submit sample for approval. See Note 6.M above for bark mulch specifications.

7. Ground Cover Planting:

   A. Soil amendments shall have been incorporated into the soil prior to planting.

   B. Clear planting areas of rocks and debris greater than 1” diameter.

   C. Apply a pre-emergent herbicide, per manufacturer's directions.

   D. All ground cover areas shall have complete coverage at spacings noted on plans.

   E. All planting areas with slopes greater then 2:1 shall have jute mesh installed per manufacturer recommendations.

   F. All planting areas shall receive 2” depth of bark mulch unless otherwise indicated. See Note 6.M above for bark mulch specifications.

   G. Thirty (30) days after planting, replace all dead plants and fill in bare ground cover areas. Top dress with 16-6-8 fertilizer at 7 lbs./1000 sq. ft. when ground cover is dry and thoroughly irrigate promptly after application

   (Applied rates of soil amendment and commercial fertilizer shall be used for bidding purpose until determined by soil tests)

9. Sod Planting:

   A. Soil amendments shall have been incorporated into the soil prior to sod planting.

   B. Sod shall have been grown for a minimum of 9 months and a maximum of 18 months and shall be vigorous, well-rooted and healthy turf.

   C. Bring sod area to within 3/4” of top of paving or header.

   D. Rake area to be smooth, and to drain removing all rocks, clogs and debris greater than 1” diameter.

   E. Install sod per grower's instructions. Roll with heavy roller following application to eliminate air pockets and to compact sod.

   F. Top dress with 11-8-4 or approved fertilizer at rate of 15 lbs. per 1,000 sq. ft after 6 weeks, when sod is dry and thoroughly irrigate promptly after application

   (Applied rates of soil amendment and commercial fertilizer shall be used for bidding purpose until determined by soil tests)

   G. Sod shall not exceed 2” in height.

10. Workmanship:

    Precautions shall be taken to avoid damage to existing plants, turf and structures. Any areas damaged shall be restored to their original condition.

11. Clean-up:

    Keep all areas of work clean, neat and orderly at all times. Keep all paved areas clean during planting and maintenance operations.

12. Site Visits and Approvals:

    The Contractor shall contact the Owner's Representative for review and approval of plant materials (see Note 4 above) and plant locations (see Note 6 above). The maintenance period begins following acceptance of plant installation.

13. Maintenance:

    A. Begin maintenance after each plant and each portion of lawn or ground cover is installed and continue until Final Acceptance.

    B. Maintenance Period shall begin upon inspection and approval by Owner's Representative and shall be for 60 calendar days.

    C. Maintenance of new planting shall consist of watering, cultivating, weeding, mulching, re-staking, tightening and repairing of guys, resetting plants to proper grades or upright position, restoration of the planting saucer, and furnishing and applying such sprays and invigorates as are necessary to keep the plantings free of insects and disease and in thriving condition.

    D. Maintenance of lawns shall consist of weeding, watering, mowing, treatment of fungus disease and insect pests, repair of erosion, fertilizing and all incidental work necessary to maintain turf satisfactory to the Owner. All areas sodded shall be mowed weekly beginning 14 days after sodding at a height no less than 2”. All areas seeded shall be mowed only after lawn reaches 3” in height; lawn shall not be cut lower than 3” at its' first mowing. After first mowing, lawn shall be mowed weekly at a height no less than 2”

    E. Protect planting areas and plants at all times against damage of all kinds, including frost, for duration of maintenance period. Maintenance includes temporary protection fences, barriers, covers during frost and signs as required for protection. If any plants become damaged or injured, treat or replace as directed by Landscape Architect at no additional cost to Owner.

14. Guarantee:

    A. All trees and shrubs shall be in thriving condition 1 year from the date of final acceptance. Replace any trees which have lost at least 30% of their normal foliage or are not in vigorous growing condition.

CLIENT:
SUMMERHILL HOMES
777 SOUTH CALIFORNIA AVE.
PALO ALTO
CA
94304
TEL 650.842.2421

CALL BEFORE YOU DIG
800.227.2600

LICENSED LANDSCAPE ARCHITECT
ZEKI R. ABED
Lic. No. 3402
Expires
STATE OF CALIFORNIA

VAN DORN ABED
LANDSCAPE ARCHITECTS, INC.
81 14TH ST. SAN FRANCISCO, CA
ZIP 94103 PH (415) 864-1921 FAX(415) 864-4796

COPYRIGHT © 2006 VAN DORN ABED LANDSCAPE ARCHITECTS, INC.
ALL DRAWINGS & WRITTEN MATERIAL APPEARING HEREIN CONSTITUTE THE ORIGINAL & UNPUBLISHED WORK OF THE LANDSCAPE ARCHITECT & SAME MAY NOT BE DUPLICATED, USED, OR DISCLOSED WITHOUT THE WRITTEN CONSENT OF THE LANDSCAPE ARCHITECT.

PROJECT MANAGER: MW
DRAFTED BY: WM
CHECKED BY: ZA

PROJECT NAME/LOCATION:
RANCHO LAGUNA
MORAGA CA.

DRAWING TITLE:
LANDSCAPE CONSTRUCTION DRAWINGS

REVISIONS: NO.	DESCRIPTION	BY:	DATE

SHEET TITLE: SPECIFICATIONS

SCALE: N/A

ISSUE DATE: 02/27/15

PROJECT NO.: V1226

SHEET NO.: L5.0

CONSTRUCTION NOTES:

1. Concrete work: Install concrete work as detailed. Layout of concrete work shall be as shown on construction plans and as specified below.

   A. Layout shall be approved by Owner's representative/Landscape Architect prior to concrete pour. Contact Owner's Representative two days in advance.

2. Paving Installation:

   A. Concrete Materials: For paving, concrete shall be a 5 sack mix producing concrete having a 28 day strength not less than 2500 psi. For walls concrete shall be 6 sack mix.

      i. Portland cement: Conforming to ASTM. C150, Type I or II. Total alkali content not to exceed 0.60%. Deliver cement and all materials in labeled, unopened containers.

      ii. Form coatings: Standard product resin type sealer. Do not use form oil or any oil-bearing material.

      iii. Concrete aggregates: Conform to ASTM C33. Maximum 3/4" size aggregate.

      Base course aggregates: Conform to ASTM C33. Maximum 3/4" size aggregate.

      iv. Water: Clean and potable.

      v. Forms: Form material is Sub-contractor's option.

      vi. Admixtures or finish retardants: For workability, where approved by Owner's representative, and admixture may be added in accordance with manufacturer's recommendations. Obtain approval of material prior to use.

      vii. Expansion joint material: 3/8" thick pre-molded joint filler, conforming to ASTM D1751 or D1752.

      viii. Reinforcing steel:

      Bars: Deformed, intermediate grade, conforming to ASTM A615, Grade 40 for sizes #5 and smaller.

      Tie wire: Annealed copper-bearing steel wire, minimum 16 gauge.

      ix. Welded wire mesh: 6" x 6" x #10.

      x. Liquid curing compound as required: Thompson's approved standard product fugitive resin type, or equal conforming to ASTM C309, free of wax or oil, compatible with subsequently applied finishes or coverings, not deleterious to bond of cementitious materials to aggregate

      xi. Patching mortar: One part Portland cement or equal (part white and part gray adjusted to match color of surrounding concrete) and 2-1/2 parts sand with the least water required to produce a workable mass. Rework this mortar until it is the stiffest consistency that will permit placing.

   B. Concrete Installation:

      i. Construct the subgrade true to grade and detail as shown. Compact subgrade to 95% maximum density at optimum moisture content.

      ii. Set forms with upper edges true to line and grade. Properly brace or tie together to maintain position and shape. Remove side forms not sooner than 12 hours after finishing has been completed. Form curves and straight sections for smooth and continuous lines. Secure Owner's representative's approval of subgrade compaction and moisture content and form alignment prior to pouring concrete.

      Embedded items: Do not place any concrete until all inserted items such as sleeves, anchor bolts, wood, nails, dowels, etc. are installed in their proper locations, secured against displacement, cleaned, inspected and approved. Furnish ties and supports necessary to keep embedded items in place when concrete is placed.

      iii. Weather: Do not place concrete during rain unless measures are taken to prevent damage to concrete.

      iv. Deposit concrete evenly, consolidate with mechanical vibrators, particularly at side forms and strike off to indicated elevations and contour.

      v. Concrete finishes shall be even surfaces of uniform texture and appearance, free of unsightly bulges, depressions and other imperfections and as follows:

      Medium broom finish: Broom with coarse bristled broom across width of flatwork to a uniformly roughened surface. Finished surface and edges shall be clean with uniform and reasonably straight lines. Submit Sample.

      Light broom finish: Broom with janitor's push broom type, with soft bristles, across width to a uniformly roughened surface. There shall be no deeply incised or obvious lines. Submit sample.

      Steel trowel finish: After floating, and no free water is evident and/or no cement sticks to the finger when touching slab, steel trowel until hard. All trowel marks eliminated. Final trowelling done when a ringing sound is produced as the trowel is moved over the surface.

      Joints: Joints shall be tooled with one-quarter inch (1/4") radius edging tool or as shown on plans.

      Edges: Edge slabs one-half (1/2") inch radius, edge curbs and other structures three-quarters inch (3/4") radius unless otherwise shown.

      Remove flange marks: Remove flange marks resulting from tooling of edges by carefully trowelling out, unless specifically detailed in plans.

4. Carpentry:

   A. Wood materials: See details for type of wood for each item.

      i. Douglas fir: Graded Select Structural No. 1 - Exposed and shall be selected for straightness and for smoothness, sized as shown in details.

      Treat all wood members which touch the soil or are within 6 inches of the soil with a pressure preservative treatment which does not change the color of the wood, as prescribed by the American Wood Preservers Association standards.

      ii. Redwood: Selected for straightness and smoothness, size and grade as shown in plans.

   B. Workmanship: Carefully plan and layout the work as required. Properly accommodate the work of other trades. Accurately saw-cut and fit lumber into the respective locations, true to line, grade, and level, as indicated or required, and permanently secure in proper position with spikes, nails, lag screws, bolts, hangers, or other fastenings to make the work substantial and rigid in all parts and connections.

   C. Connections: Make connections between members tight, accurate and secure. Place fastenings without splitting wood; predrill when required. Drill bolt holes same size as bolt diameter. Drill holes for lag screws same size as thread root diameter; and counterbore, same depth and diameter as shank. Turn lag screws into place; do not drive. Provide bolts and lag screws with washers under every head and nut bearing on wood. Tighten bolts and lag screws at installation; carefully retighten just prior to closing in, or at completion of project.

   D. Finishing: As per plan.

   E. Redwood header layout: All curved sections shall be smooth and continuous. Layout shall be approved by Owner's representative.

8. Hardware:

   A. All metal bolts, nails, screws and other hardware shall be galvanized steel, sized as shown on the plans.

   B. All visible hardware shall be painted with two coats of black rustproof paint or to match architectural colors. Color to be approved by Owner's representative.

   C. All hardware for metal gates to be approved by Owner's representative.

9. Metal:

   A. Provide complete shop drawings for all metal fabrication.

   B. Metal fence: Fabricated for installation in configuration shown on plans. Posts shall be equally spaced in each straight section at approx. 6'-0" o.c. Verify dimensions in field.

   C. Fabricate all exterior steel work in shop, including all welding. All metal work shall conform to ASTM specifications. Miter corners and angles of moldings or frames unless otherwise noted.

   D. Deliver fence to site with all welded connections, burrs and rough surfaces ground smooth, cleaned and painted with shop prime coat (dry completely prior to delivery).

   E. Shop primer: One coat of primer, semi-quick drying.

      Painting: After material has been properly cleaned, apply shop prime coat of paint to all surfaces. Apply all paint in accordance with manufacturer's directions. Spot paint all abrasions and field connections after assembly.

   F. Installation: Set all work plumb, true, rigid and neatly trimmed out as detailed. Provide all necessary connections, anchor bolts etc. required to fit metal with other work.

      Protect all metal from damage to surface, profile or to shape from shop through construction to final acceptance of project.

      Paint fence and gates with two coats of rust-proof enamel. All exposed fastenings to match color and finish of fence and gates.

   G. Color: Color to be approved by Owner's representative, submit sample for approval.

   H. All defective work shall be repaired or replaced as directed by Owner's representative.

CLIENT:
SUMMERHILL HOMES
777 SOUTH CALIFORNIA AVE.
PALO ALTO
CA
94304
TEL 650.842.2421

CALL BEFORE YOU DIG
811
800.227.2600
LICENSED LANDSCAPE ARCHITECT
JEFF R. ABED
Lic. No. 3402
Expires
STATE OF CALIFORNIA

VAN DORN ABED
LANDSCAPE ARCHITECTS, INC.
81 14TH ST. SAN FRANCISCO, CA
ZIP 94103 PH (415) 864-9921 FAX(415) 864-6796

COPYRIGHT © 2006 VAN DORN ABED LANDSCAPE ARCHITECTS, INC.
ALL DRAWINGS & WRITTEN MATERIAL APPEARING HEREIN CONSTITUTE ORIGINAL WORK OF THE ARCHITECT & SAME MAY NOT BE DUPLICATED, USED OR DISCLOSED WITHOUT WRITTEN CONSENT OF THE LANDSCAPE ARCHITECT.

PROJECT MANAGER: MW
DRAWN BY: TM
CHECKED BY: ZA

PROJECT NAME/LOCATION:
RANCHO LAGUNA
MORAGA CA.

DRAWING TITLE:
LANDSCAPE CONSTRUCTION DRAWINGS

REVISIONS:

NO.	DESCRIPTION	BY:	DATE

SHEET TITLE:
SPECIFICATIONS

SCALE: N/A
ISSUE DATE: 02/27/15
PROJECT NO.: V1226
SHEET NO.: L5.1
44 of 44