DESIGN REVIEW BOARD STAFF REPORT

MEETING DATE: March 28, 2011 **REPORT WRITTEN:** March 22, 2011

ITEM NUMBER: VI.A. – DESIGN REVIEW

FILE NUMBER: **DRB 01-11 and GP 11-02 Ron Tapper (Applicant), Saint Mary's College of California (Owner) Multi-Use Playing Field Upgrade at 1928 Saint Mary's Road:** Application for conversion of a grass athletic field to a synthetic turf playing field located west of the Saint Mary's Stadium and east of McKeon Pavilion. The improvements to the playing field also include four new 70-foot high light poles with 12 lights on each pole. Grading for the project includes removal of approximately 1,800 cubic yards of soil with the turf strippings placed on an organic material stockpile located on the hillside south of the stadium. APN 258-150-006 and 258-140-001

ZONING: Institutional

CEQA STATUS: The replacement of the grass with artificial turf is categorically exempt under CEQA Guidelines Section 15302 which allows replacement or reconstruction of existing structures and facilities where the new structure will be located on the same site as the structure replaced and will have substantially the same purpose and capacity as the structure replaced. The installation of the new lights for the playing field is categorically exempt under CEQA Guidelines Section 15311, which consists of construction, or placement of minor structures accessory to existing institutional facilities. The placement of the turf strippings on the hillside area above the playing field is categorically exempt under the CEQA Guidelines Section 15304(a), which includes minor alterations to land where the slope at the disposal site is less than 10 percent.

PUBLIC NOTICE AND MAILING LIST:
In accordance with Moraga Municipal Code Section 8.72.130(B)(1), a notice of the application for replacement of the natural grass with synthetic turf and installation of new lights at the multi-use athletic field and grading at the organic material stockpile area on the hillside above the Saint Mary's College stadium was mailed to all property owners within three hundred (300) feet of the Saint Mary's campus on March 18, 2011. A copy of the map showing the area of notice, the mailing list and public notice is attached as **EXHIBIT A**.

PROJECT DESCRIPTION:
In order to install the synthetic turf, approximately 1,200 cubic yards of gravel will be imported for a 6-inch thick layer of gravel under the synthetic fiber playing field. Drainage pipes will also be installed below the artificial turf playing field. Approximately 1,800 cubic yards of turf strippings will be taken off the existing playing field and moved to an organic material stockpile area located on the hillside south of the stadium. The stockpile area will be located on a slope that is less than 10%. The four new light poles will be the most significant change to the existing athletic field; however, each of the twelve lights will have a hood to direct the

light down on the field. This field is also located behind the bleachers for the stadium field so that the 70-foot high poles would only be about 50-feet above the height of the bleachers. The location of the Multi-Use Playing Field, the Saint Mary's Stadium and the hillside south of the stadium are shown on the GIS aerial photo map below:

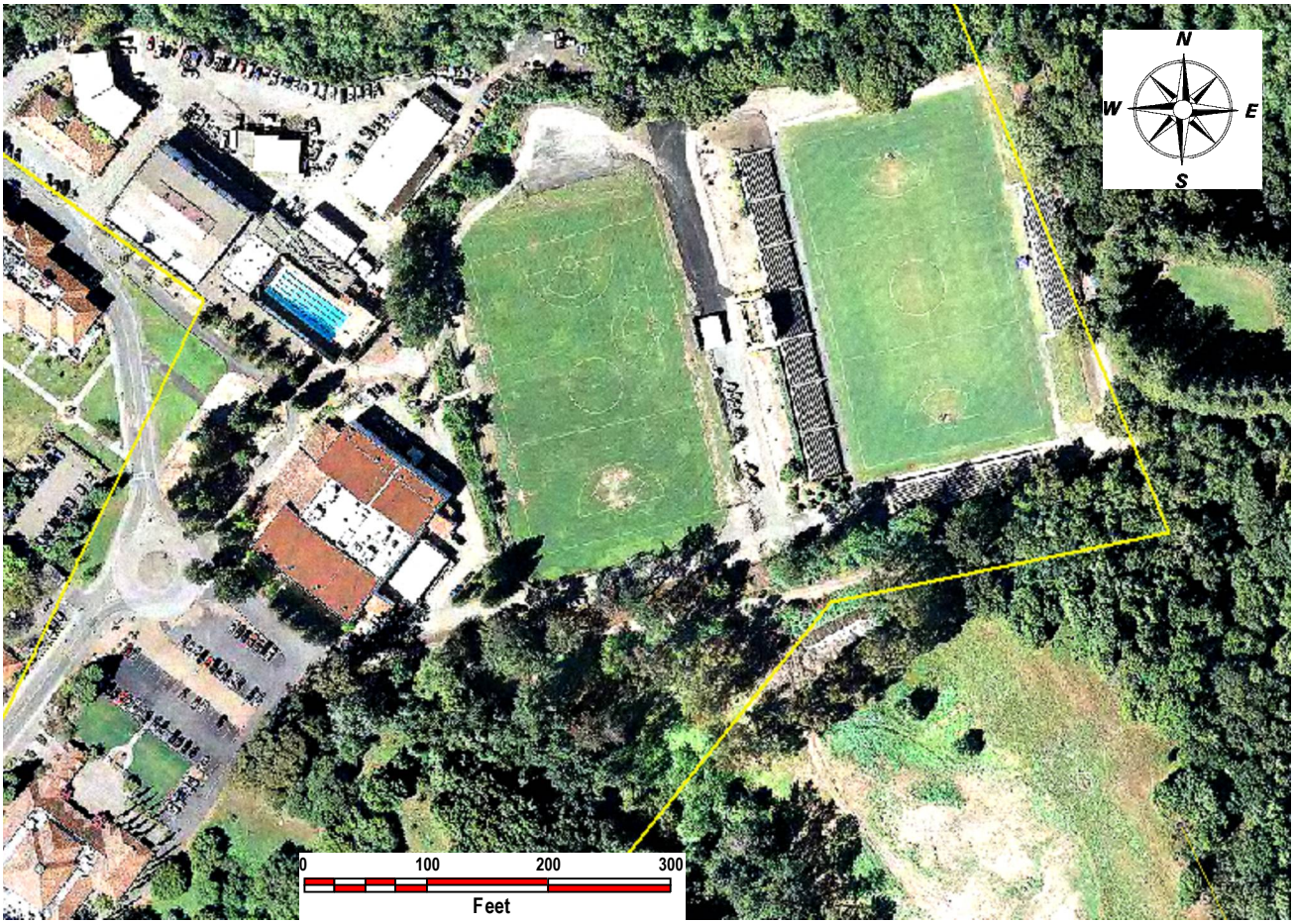

DISCUSSION:

There are three aspects of the project that require Design Review Board approval as follows:

1. The multi-use athletic field is located within 500-feet of Bollinger Canyon Road, which is a designated scenic corridor.
2. The design of the proposed light standards, which are the only new above ground feature of the project.
3. The grading necessary for the replacement of the natural grass turf with the synthetic turf and placement of the turf strippings on the hillside stockpile area.

The northeast corner of the field is 420-feet from Bollinger Canyon Road; however, the center of the field is 584-feet from the scenic corridor. The trees along Las Trampas Creek and the Lake La Salle area effectively screen any direct view of the field from the road. The plans and specifications for the proposed "Green Generation" light standards are included as **EXHIBIT B**. The 70-foot high lights may be higher than some of the trees between the field and Bollinger Canyon Road, but they would not be directly visible from vehicles on the road. MMC Section 8.132.040-B-2 grants an exception to the regulations of the scenic corridor ordinance for buildings, exterior additions, walls, fences or signs that are not visible from the

roadway. Since towers or light standards are not listed as exceptions, staff has included a discussion of the applicable development guidelines from MMC Section 8.132.050 in **EXHIBIT C**, as well as, applicable Design Review Guidelines for scenic corridors and for exterior lights. Moraga does not have a "Dark Sky" ordinance that would regulate the amount of light that is allowed to scatter upwards. All the proposed lights will have hoods to direct the light onto the field. Some of the homes located in the Bollinger Bluffs neighborhood on the hillside above Bollinger Canyon Road have views of the multi-use field. The new lights would allow activity on the field to extend later at night, which could have some noise impacts to Bollinger Bluffs residents. Although not strictly a "design" issue, it would seem prudent to consider a limitation on the hours of use, such as 10:00 p.m. The panorama picture below shows the view from the multi-use athletic field towards the Saint Mary's Stadium and the trees along Las Trampas Creek at the left end of the field.

The picture below is enlarged to show more clearly some of the homes on the hillside north of the multi-use field and beyond the Saint Mary's Stadium.

Approximately 1,800 cubic yards of soil will be removed from the multi-use field in order to install the gravel and drainage under the new permeable synthetic turf. MMC Section 14.12.010 requires Design Review Board approval of any grading exceeding 200 cubic yards. The slope of the playing field is essentially level. The "turf strippings" will be taken up a hill south of the stadium to a stockpile of organic material. Sheet C5.0 of the project plans shows the topography and proposed location of the "strip borrow area". The slopes of the strip borrow area vary between 8.3% to 22.7%, with an average of about 10.6%. A total of 6,900

cubic yards of soil will be excavated from the hillside area; however, most of this soil will be used as fill for the new baseball field. Since the grading for both the multi-use athletic field and the baseball field will use the same “strip borrow area”, the projects will be treated as a single grading permit by the Engineering Department. The same findings will be used for approval of the grading for both projects. Approximately 1,200 cubic yards of fill will be taken from the “strip borrow area” for the multi-use athletic field. The cut into the hill at the southeast end of the strip borrow area will have a 3:1 slope (33.3%). Part of the area with the 3:1 slope is designated as an “existing fill area”, where grading has been done for previous projects at Saint Mary’s College. The natural existing slope above the cut slope is between 50% and 70% as depicted on the GIS slope map below.

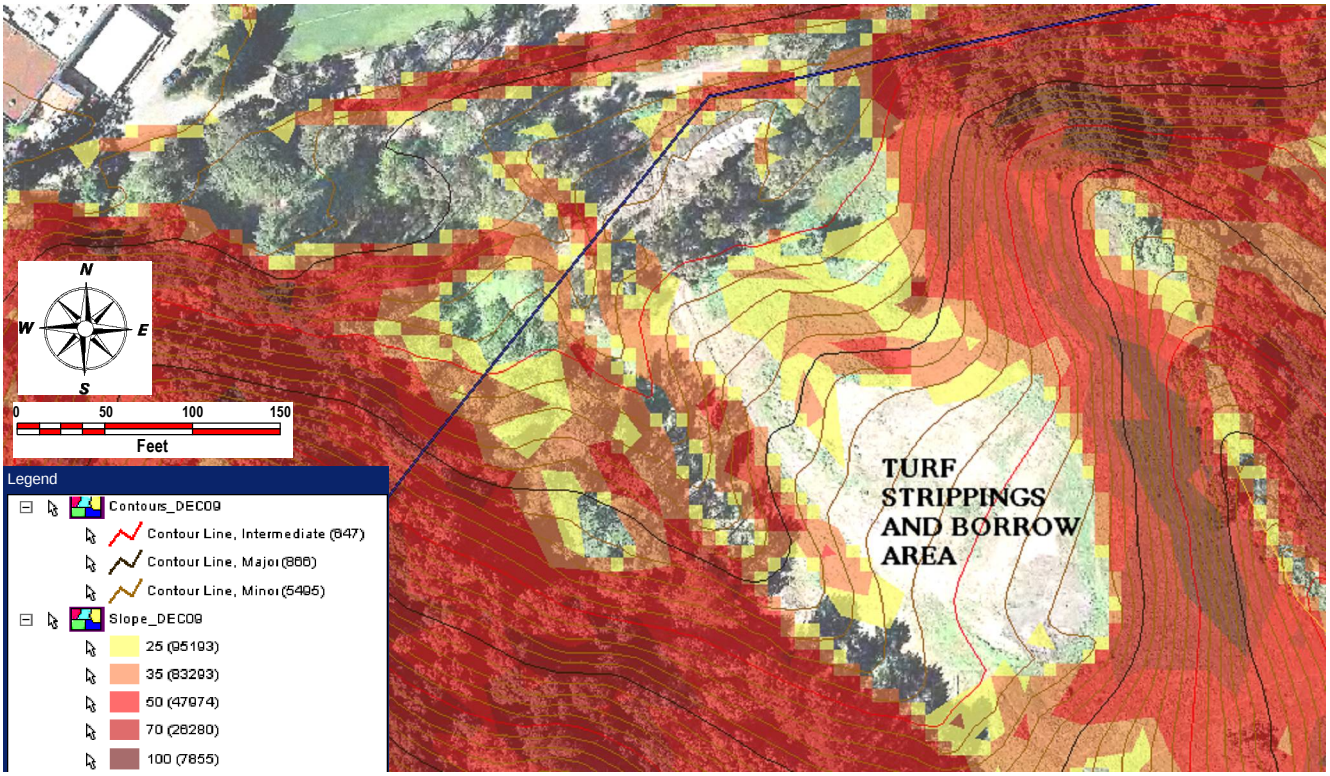

The project Geotechnical Engineer for Saint Mary’s College has determined there is no hazard represented by the excavation at the borrow site and the resulting 3:1 cut slope. The Town Engineer has requested confirmation of this conclusion from the Town’s Geotechnical Peer Review Consultant. The picture below shows the “strip borrow area”.

FINDINGS FOR APPROVAL OF GRADING PERMIT:

In accordance with MMC Section 14.12.030 on average slopes less than twenty five (25) percent, the grading permit may be granted by the Board only after a determination that the grading is:

1. Consistent with the Town Design Guidelines;
   Finding: *The grading projects for both the multi-use athletic field and the relocation of the baseball field were analyzed with respect to compliance with the Town's Design Guidelines in* **EXHIBIT D***. The topography and elevation of the playing fields will not change significantly. The placement of the fill on the hillside "strip borrow area" will conform to the natural contours of the hillside and the grading in this area is substantially screened from view behind existing trees. The "strip borrow area" will be consistent with the Town's Design Guidelines.*

2. Consistent with the regulations of Chapter 14.12 MMC (Grading Ordinance);
   Finding: *The proposed final grades for both the multi-use athletic field and the relocation of the baseball field will not change significantly and appropriate detention basins and other drainage features will be implemented to comply with the Town's permit under the Regional Water Quality Control Board and BMP's for stormwater and erosion control. The borrow site and temporary and final organic material stockpile areas on the hillside area south of the Saint Mary's Stadium will involve an excavation into the slope with a new engineered slope of 3:1. The excavation required to provide the fill for the fields results in a slope meeting the maximum slope of 3:1 to conform with the hillside. The deposited strippings and recontouring of the fill in the borrow site will result in a slope of less than 5% over most of the borrow area toward the hill and a slope of less than 3:1 to meet the contour of the hillside. The slope of both the fill and excavation are consistent with the requirements of Chapter 12.48. Since the borrow area is not intended to support structures, the compaction requirements of Chapter 12.48 do not apply.*

3. Not detrimental to public safety;
   Finding: *Both the multi-use athletic field and the relocated baseball field are essentially level and there will be no slope stability issues with the proposed grading of these fields. The average slope in the area of disturbance for the strip borrow site will be less than 25% and the proposed fill sites for the turf strippings will have slopes of 10%. Both the temporary and final organic material stockpiles will be on slopes that are less than 10%, which are exempt from environmental review. The proposed fill sites will not be used for the construction of any buildings or structures and will remain open space. Generally slopes of 20% or less are considered to be not susceptible to landslides; therefore, the placement of the organic material stockpiles will not be detrimental to public safety. The project Geotechnical Engineer has determined there is no hazard represented by the excavation at the borrow site and the resulting 3:1 cut slope. The Town has asked Cal Engineering and Geology, Inc. to review this conclusion.*

4. Not detrimental to stormwater runoff;
   Finding: *The multi-use athletic field will be covered with pervious synthetic turf with gravel and a drainage system installed under the turf. The stormwater runoff from the new surface will be nearly identical to the runoff from the existing turf over heavy clay*

that exists today. The relocated baseball field will have natural grass turf over portions of the in-field and out-field and a retention basin adjacent to the ball field to retain stormwater runoff during peak periods. The plans for the "strip borrow area" on the hillside south of the Saint Mary's Stadium include erosion control plans (sheets C5.1 and C5.2). The area will eventually be completely covered with native grasses again.

5. Consistent with the requirements of Chapter 8.136 MMC (Slope Density – HDP);
   Finding: *Neither the multi-use playing field nor the relocated baseball field have any slopes over 20%. "Hillside land" is defined as any land which has a slope of twenty (20) percent of greater. MMC section 8.136.040-B requires a Hillside Development Permit (HDP) for any grading, clearing, construction upon or alteration of hillside land. The existing topography in the "strip borrow area" is generally less than 10%. A HDP is not required provided that none of the strippings is deposited on any slope exceeding 20%. The contractor may have to adjust the location of the temporary organic material stockpile further to the southwest to avoid the steeper slope on the northeast side of the stockpile. The existing slope, which is less than 20%, at the southeast side of the "final organic material stockpile area" will be graded with an engineered slope of 3:1 (33.3%). Although the final slope will be steeper than 20%, the original slope is less than 20% and a HDP is not required.*

6. Natural Contour Grading;
   Finding: *The proposed grading on the hillside area south of the Stadium has gently rounded contours that conform to the natural slopes and do not look like engineered cuts and fills.*

7. Minimizes Soil Displacement;
   Finding: *The cut and fill from the multi-use playing field, the relocated baseball field and the strip borrow area will be balanced and there will be no off-haul from Saint Mary's College. The turf strippings from the playing fields are the minimum necessary to prepare the areas for the new turf. The quantity of imported drain rock is necessary to meet the requirements of improved drainage and to manage stormwater runoff flows while reducing sediment into local creeks.*

8. Minimizes the use of retaining walls;
   Finding: *The project does not involve the construction of any retaining walls.*

9. Not inconsistent with the general plan.
   Finding: *The project is consistent with applicable General Plan policies, CD1.3 and CD1.4 as discussed below:*

   CD1.3 Protect important elements of the natural setting to maintain the Town's semi-rural character. Give particular attention to viewsheds along the Town's scenic corridors, protecting ridgelines, hillside areas, mature native tree groupings, and other significant natural features. Consideration should be given to views both from within the Town and from adjacent jurisdictions.

   Comment: *Although both the multi-use athletic field and the relocated baseball field are within 500-feet of designated scenic corridors, they are setback a considerable distance from the roadway. The multi-use athletic field is substantially screened by the existing trees in the Las Trampas Creek area. The new baseball field will be more visible from the scenic*

corridor, but existing trees between St. Mary's Road and the baseball field will help to mitigate the views. No mature native tree groupings will be removed at either of the playing fields or at the strip borrow area. Until the native grass grows back to cover the organic material stockpiles, the only visual impact to the hillside area south of the Stadium will be the appearance of two patches of exposed earth. The most significant visual impact will be the eight foot high chain link fence with green padding and the 10-foot high net fence above the chain link fence. The 25-foot high batters eye and scoreboard at the center outfield will also be a prominent new feature located about 375-feet from St. Mary's Road. The plans call for new redwood trees to be installed to help screen these features from the scenic corridor.

CD1.4 Preserve both close-up and distant views of the natural hillside landscape from valley areas.

Comment: *Close-up and distant views of the proposed strip borrow area from the nearby valley areas are blocked by the existing trees along the lower slope of the hill at the southeast end of the Stadium and multi-use playing field.*

PERMIT STREAMLINING ACT:

The Permit Streamlining Act requires a decision on the project within ***60 calendar days*** after a project has been found to be exempt from CEQA or a negative declaration is adopted for the project. The staff report was written on March 22, 2011 at which time the proposed grading for placement of the turf strippings was determined to be exempt from CEQA. Therefore, the application must either be approved or disapproved by May 21, 2011 unless both the Town and the applicant agree to a one time 90-day extension.

RECOMMENDATION:

Staff recommends approval of the upgrades for the multi-use athletic field and for the grading necessary for the replacement of the natural grass with synthetic turf subject to the findings and conditions listed in the Draft Action Memorandum attached as **EXHIBIT E**. The conditions of approval include a requirement for the contractor to avoid placement of the turf strippings on any slope steeper than 10% for the temporary organic material stockpile. The conditions also include a restriction on the hours of use of the new lights to 10:00 p.m. to help mitigate any potential for noise on the playing fields late at night.

Prepared By Richard Chamberlain, Senior Planner and
John Sherbert, Assistant Town Engineer

EXHIBITS:

A – Notice Area Map, Mailing List and Public Notice
B – Plans and Specifications for the Green Generation Luminaires
C – Applicable development guidelines from MMC Section 8.132.050, Applicable Design Review Guidelines for scenic corridors and exterior lights.
D – Applicable Town Design Guidelines for Grading
E – Draft Action Memorandum
F – Project Plans for the Multi-use Athletic Field

EXHIBIT A

NOTICE AREA MAP, MAILING LIST AND PUBLIC NOTICE

VICINITY MAP AND AREA OF NOTICE

Saint Mary's College of California
DRB 01-11 – Multi-Use Athletic Field Upgrade
DRB 02-11 – Relocation of Baseball Field
GP 11-02 – Grading Permit for Ball Fields

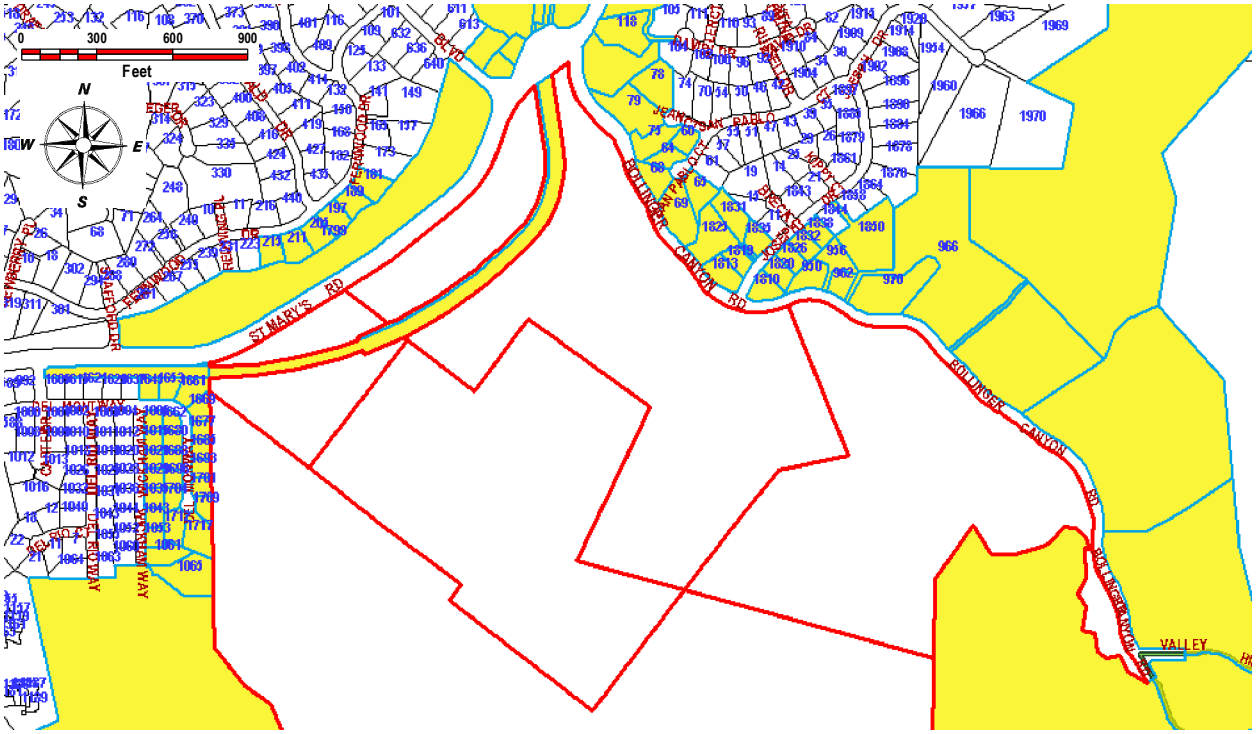

See next page for entire notice area on smaller scale map

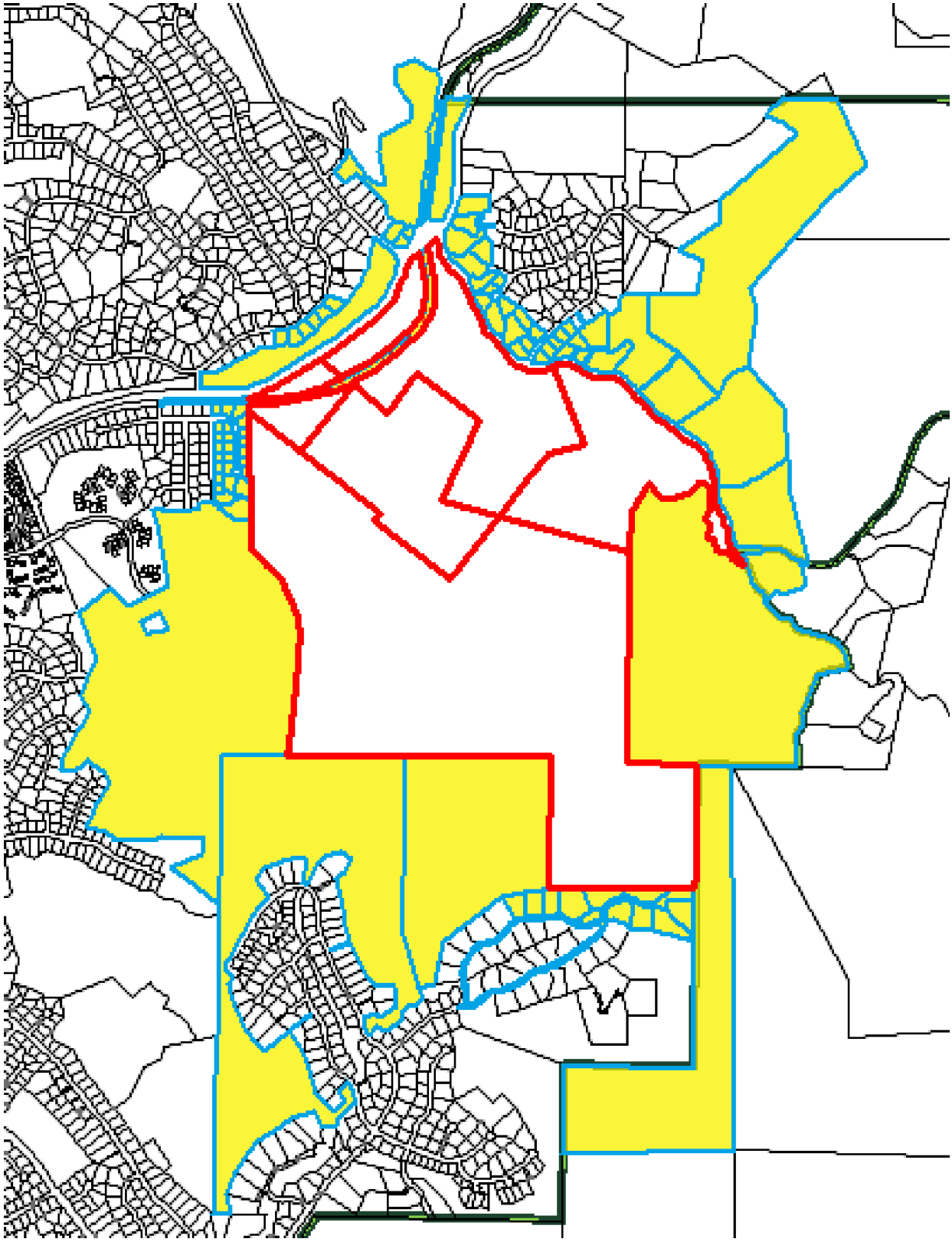

MAILING LIST FOR SAINT MARY'S COLLEGE MULTI-USE ATHLETIC FIELD UPGRADE AND RELOCATION OF BASEBALL FIELD

APN	Name	Address	City & Zip
258730033	Stephen E Roberts Trust	268 SILVERADO CT	OAKLAND , CA 94605 5026
258730021	Gary M Gendel Trust	4 JULIANNA CT	MORAGA, CA 94556 2832
258730034	Douglas S & Julie K Ewert	8 JULIANNA CT	MORAGA, CA 94556 2832
258730020	Afp/1 Llc	2007 BRADHOFF AVE	SAN LEANDRO, CA 94577 6118
258710003	Chai Hung Luk Trust	50 MERRILL CIR N	MORAGA, CA 94556 2839
258710002	John C Cheng Trust	48 MERRILL CIR N	MORAGA, CA 94556 2839
258730009	David W & Camay Dobon	46 MERRILL CIR	MORAGA, CA 94556
258730027	Kamal Duggirala Trust	3 JULIANNA CT	MORAGA, CA 94556 2832
258730023	Earl W & Robin D Flowers Trust	5 JULIANNA CT	MORAGA, CA 94556 2832
258730035	Douglas S & Julie K Ewert	8 JULIANA CT	MORAGA , CA 94556
258300019	Common Area-tract 6292	2 SANDERS RANCH RD	MORAGA , CA 94556 2804
258450011	Fariborz Fred Mirkhani	6114 LA SALLE AVE, Apt.#628	OAKLAND, CA 94611 2802
258160062	Joan E Bruzzone	899 HOPE LN	LAFAYETTE , CA 94549
258391008	Adrian A & Ellen B Gunderson	1065 WICKHAM DR	MORAGA, CA 94556 2038
258391009	Donald E & Melinda F Groom Trust	1061 WICKHAM DR	MORAGA, CA 94556 2038
258391003	Doe S Cayting	1053 WICKHAM DR	MORAGA, CA 94556 2038
258130001	Charlene C Harvey Trust	1020 VALLEJO ST	SAN FRANCISCO, CA 94133 5448
258371015	Ralph A & Linda G Zappala	1717 DEL MONTE WAY	MORAGA, CA 94556 2029
258391002	R Thomas P C P Westhoff Trust	1043 WICKHAM DR	MORAGA, CA 94556 2038
258371016	Darren & Maria Chilimidos	1712 DEL MONTE WAY	MORAGA, CA 94556 2030
258371014	Bradly Jay & Jamie Ertola Trust	1709 DEL MONTE WAY	MORAGA, CA 94556 2029
258371017	Kevin & Jennifer Mckenzie Trust	1704 DEL MONTE WAY	MORAGA, CA 94556 2030
258391001	Kurt A Nielsen	304 LARKIN DR	BENICIA , CA 94510 1414
258012038	Charlene C Harvey Trust	1020 VALLEJO ST	SAN FRANCISCO, CA 94133 5448
258371013	Jimmy Joung Wook & Moon Pak	1701 DEL MONTE WAY	MORAGA, CA 94556 2029
258371018	Kenneth R & Carol R Ogren Trust	1696 DEL MONTE WAY	MORAGA, CA 94556 2040
258371025	Margie A Goldstein Trust	1029 WICKHAM DR	MORAGA, CA 94556 2038
258371012	John T Jr Burnite	1693 DEL MONTE WAY	MORAGA, CA 94556 2043
258371019	Stephen J & Robin A Gagnon	1688 DEL MONTE WAY	MORAGA, CA 94556 2040
258371024	Paul J & Brigitte Tabacco Trust	1021 WICKHAM DR	MORAGA, CA 94556 2038
258371011	Paul R & Vicky F Cohune Trust	1685 DEL MONTE WAY	MORAGA, CA 94556 2043
258371023	Paul John & Mary E Gustafson	1015 WICKHAM DR	MORAGA, CA 94556 2038
258371020	Robert M & Neville P Susich	1680 DEL MONTE WAY	MORAGA, CA 94556 2040
258371010	Grace Huei-chuan Lee	1677 DEL MONTE WAY	MORAGA, CA 94556 2043
258371021	Bradford W & Deborah Lomas Trust	1662 DEL MONTE WAY	MORAGA, CA 94556 2040
258371022	R Bradford & Charity A Huss	1005 WICKHAM DR	MORAGA, CA 94556 2038
258371009	James T Parsons	1669 DEL MONTE WAY	MORAGA, CA 94556 2043
258371006	Robert D & Emilie E Wilson Trust	1645 DEL MONTE WAY	MORAGA, CA 94556 2043
258371007	Thomas M & Sally Roberts Trust	1653 DEL MONTE WAY	MORAGA, CA 94556 2043
258371008	Joseph R & Karen M Sienkiewicz	1661 DEL MONTE WAY	MORAGA, CA 94556 2043
258012036	Charlene C Harvey Trust	1020 VALLEJO ST	SAN FRANCISCO, CA 94133 5448
258422015	Reza & Adeebeh K Fakurnejad	962 BOLLINGER CANYON RD	MORAGA, CA 94556 2703
258422010	Charles R & Laurie Luecker Trust	1810 JOSEPH DR	MORAGA, CA 94556 2711

258422013	Joseph F Salgado	950 BOLLINGER CANYON RD	MORAGA, CA 94556 2703
258422018	Kyle & Anne B Hickey	970 BOLLINGER CANYON RD	MORAGA, CA 94556 2703
258422009	John R & Carol J Tomei	1820 JOSEPH DR	MORAGA, CA 94556 2711
258421001	Paul Sorich	1813 JOSEPH DR	MORAGA, CA 94556 2710
258421002	Peter L & Lynda Snell Trust	1819 JOSEPH DR	MORAGA, CA 94556 2710
258422008	David C & Diane Hoopes Trust	1826 JOSEPH DR	MORAGA, CA 94556 2711
258422014	Reza & Adeebeh Fakurnejad	962 BOLLINGER CANYON RD	MORAGA , CA 94556
256151001	James C Wilson	215 FERNWOOD DR	MORAGA, CA 94556 2115
258422007	Don-tzei Wen	1832 JOSEPH DR	MORAGA, CA 94556 2711
256141017	John D & Cindy M Oconnor	211 FERNWOOD DR	MORAGA, CA 94556 2115
258421017	Karen A Cain Trust	1835 JOSEPH DR	MORAGA, CA 94556 2710
258422006	Brian W Lok	1838 JOSEPH DR	MORAGA, CA 94556 2711
256141016	Ryan J & Kimberly F Thompson	205 FERNWOOD DR	MORAGA, CA 94556 2115
258421003	Petr Horava	1825 JOSEPH DR	MORAGA, CA 94556 2710
256141015	H Edward & Kathryn A Zuber Trust	197 FERNWOOD DR	MORAGA, CA 94556 2315
258422004	Gary E Howard Trust	1850 JOSEPH DR	MORAGA, CA 94556 2711
258421016	Darrell & Michele Kong	1831 JOSEPH DR	MORAGA, CA 94556 2710
256141014	Brian W & Janet Davis Trust	189 FERNWOOD DR	MORAGA, CA 94556 2315
258461010	Andrew & Andrea Firth	69 SAN PABLO CT	MORAGA, CA 94556 2717
258461009	Stephen H & Kappy L Dye	65 SAN PABLO CT	MORAGA, CA 94556 2717
258012045	Matthew C Westphal Trust	966 BOLLINGER CANYON RD	MORAGA, CA 94556 2703
256141013	Hardip S & Manjot K Pannu Trust	181 FERNWOOD DR	MORAGA, CA 94556 2315
258461011	Maximo R & Mary Tom Ruiz	68 SAN PABLO CT	MORAGA, CA 94556 2729
258461012	Michael & Christen Lenahan Trust	64 SAN PABLO CT	MORAGA, CA 94556 2729
258461013	Gary A & Linda M Borrelli Trust	60 SAN PABLO CT	MORAGA, CA 94556 2729
258461024	Francis R & Sandra A Dugan	75 JEAN CT	MORAGA, CA 94556 2709
258461025	Hendrik & Eleanor Lesterhuis	79 JEAN CT	MORAGA, CA 94556 2709
258461016	William D Wright Trust	78 JEAN CT	MORAGA, CA 94556 2709
258470040	Glenmoore Construction Co	395 TAYLOR BLVD, Apt.#120	PLEASANT HILL , CA 94523 2276
258470046	David G & Terry Sylvester Trust	118 DAVID DR	MORAGA, CA 94556 2708
258470042	Glenmoore Construction Co	395 TAYLOR BLVD, Apt.#120	PLEASANT HILL , CA 94523 2276
258011006	Central CC Sanitary District	5019 IMHOFF PL	MARTINEZ , CA 94553 4316
258011005	Real Estate Services	PO BOX 24055	OAKLAND , CA 94623 1055
258012044	Kelley Yanes	1970 JOSEPH DR	MORAGA , CA 94556 2713
258011002	Mary E Ortland Trust	86 BUCKINGHAM DR	MORAGA , CA 94556 2407
256040021	Drake H & Marilyn Grega Trust	1040 DOLORES DR	LAFAYETTE , CA 94549 2908
	Ron Tapper Consulting	1184 Ross Circle	Napa, CA 94558
	J. Kehoe, Saint Mary's College	1928 Saint Mary's Road	Moraga, CA 94575
	H. Martin, Schell and Martin, Inc.	3377 Mount Diablo Boulevard	Lafayette, CA 94549
	Devin Conway, Verde Design, Inc.	2455 The Alameda, Suite 200	Santa Clara, CA 95050
	Mark Orr, Saint Mary's College	PO Box 4380	Moraga, CA 94575-4380
	J. Moore, Robert A. Bothman, Inc.	650 Quinn Avenue	San Jose, CA 95112-2604
	Jensen-Van Lienden Assoc., Inc.	1840 Alcatraz Avenue, Suite C	Berkeley, CA 94703
	Ann Rivoire, East Bay Regional Park Dist.	2950 Peralta Oaks Court	Oakland, CA 94605-0381

NOTICE

Town of Moraga

YOU ARE HEREBY NOTIFIED THAT on Monday, March 28, 2011, at **7:00 p.m**., in the **Moraga Public Library Meeting Room at 1500 St. Mary's Road**, Moraga, California, the Design Review Board of the Town of Moraga will conduct a pubic meeting to consider the following applications:

DRB 01-11 and GP 11-02 Ron Tapper (Applicant), Saint Mary's College of California (Owner) Multi-Use Playing Field Upgrade at 1928 Saint Mary's Road: Application for conversion of a natural grass athletic field to a synthetic turf playing field located west of the Saint Mary's Stadium and east of McKeon Pavilion. The improvements to the playing field include four new 70-foot high light poles with 12 lights on each pole. Each light has a hood to direct the light down on the field. Approximately 1,800 cubic yards of soil will be removed from the existing playing field. The grading and off-haul of soil necessary for the synthetic turf installation will be coordinated with the grading for the relocation of the baseball field. The turf striping's will be placed on an organic material stockpile located on a hillside with a slope less than 10% south of the stadium. The stockpile area will not exceed five feet in depth. 1,200 cubic yards of gravel will be imported for a 6-inch thick layer of gravel under the synthetic fiber playing field. The Saint Mary's College campus is in the Institutional zoning district. APN 258-150-006 and 258-140-001

DRB 02-11 and GP 11-02 Ron Tapper (Applicant), Saint Mary's College of California (Owner) Relocation of Baseball Field at 1928 Saint Mary's Road: Application to relocate the baseball field 320-feet northeast of the present location with the right outfield fence located 70-feet southwest of the main entrance road and the left outfield fence located 315-feet from St. Mary's Road. The new baseball field will have grass turf and an 8-foot high chain link fence around the entire perimeter. The outfield fences will have green padding on the inside of the fence on the northwest, north and northeast sides and a 10-foot net fence above the chain link fence. Other prominent features include a 25-foot high by 60-foot long "batter's eye" wall behind the center outfield fence and a 25-foot high by 35-foot long score board behind the right outfield fence. A landscaping plan with redwood trees is proposed for screening of these features. Tension poles varying in height from 30 to 50 feet tall would be installed along the southwest, south and southeast sides of the ball field to deflect foul balls and for the bullpen. The grading work necessary for the development of the ball field will be coordinated with the grading for the multi-use athletic field west of the stadium. Approximately 3,100 cubic yards of turf striping's will be off-hauled to the organic material stockpile located on the hillside south of the stadium. A total of 6,600 cubic yards of fill from the on-site borrow area will be used for the new baseball field. 2,000 cubic yards of gravel and 5,000 cubic yards of sand will be imported for drainage under the natural grass field. The Saint Mary's College campus is in the Institutional zoning district. APN 258-150-005

(Continued on Next Page)

Applicant	Property Owners
Ron Tapper Consulting 1184 Ross Circle Napa, CA 94558	Saint Mary's College of California 1928 St. Mary's Road Moraga, CA 94575

The plans for this project are available for public review at the Moraga Planning Department, 329 Rheem Blvd. during normal business hours (Monday, Tuesday, Thursday from 9 am to noon and other times by appointment). Comments regarding the proposed project can be submitted in writing or orally at the public meeting. Written comments submitted to the Planning Department will be copied and submitted to the Design Review Board at their meeting. For additional information, contact the Planning Department at (925) 888-7042.

Richard Chamberlain, Senior Planner

EXHIBIT B

PLANS AND SPECIFICATIONS FOR THE GREEN GENERATION LUMINAIRES

EQUIPMENT LIST FOR AREAS SHOWN								
Pole				Luminaires				
QTY	LOCATION	SIZE	GRADE ELEVATION	MOUNTING HEIGHT	LAMP TYPE	QTY / POLE	THIS GRID	OTHER GRIDS
4	S1-S4	70'	-	70'	1500W MZ	12	12	0
4	← TOTALS →					48	48	0

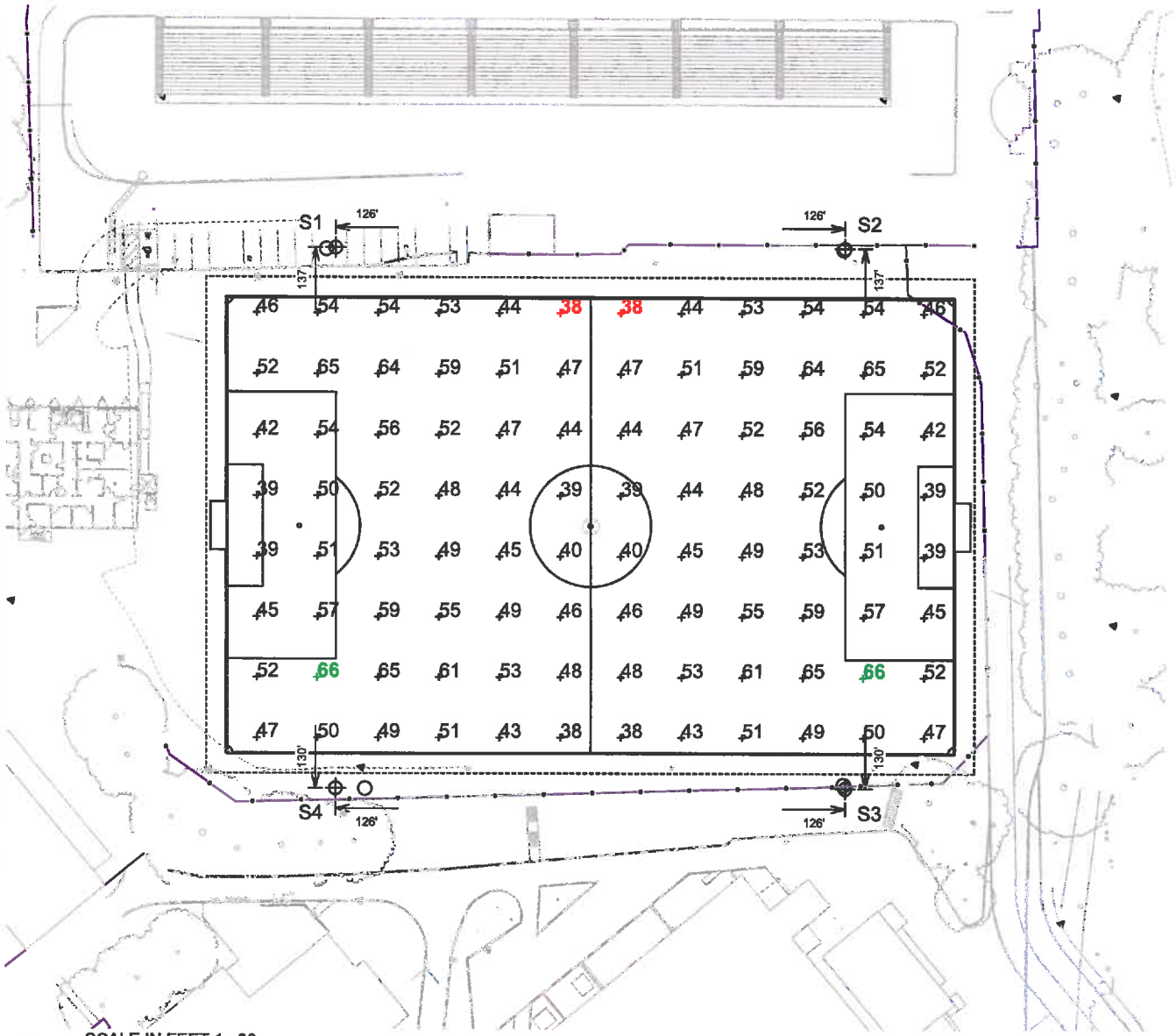

SCALE IN FEET 1 : 80

0' 80' 160'

Pole location(s) ⊕ dimensions are relative to 0,0 reference point(s) ⊗

musco GREEN GENERATION LIGHTING™

GUARANTEED PERFORMANCE

ILLUMINATION SUMMARY

Upper Field
St Marys Upper Field
Moraga,CA

Upper Field
- Size: 360' x 225'
- Grid Spacing = 30.0' x 30.0'
- Values given at 3.0' above grade

- Luminaire Type: Green Generation
- Rated Lamp Life: 5,000 hours
- Avg Lumens/Lamp: 134,000

CONSTANT ILLUMINATION HORIZONTAL FOOTCANDLES

	Entire Grid
No. of Target Points:	96
Average:	50.1
Maximum:	66
Minimum:	38
Avg/Min:	1.33
Max/Min:	1.76
UG (Adjacent Pts):	1.33
CV:	0.14

Average Lamp Tilt Factor:	1.000
Number of Luminaires:	48
Avg KW over 5,000:	75.07
Max KW:	81.6

Guaranteed Performance: The CONSTANT ILLUMINATION described above is guaranteed for the rated life of the lamp.

Field Measurements: Averages shall be +/-10% in accordance with IESNA RP-6-01 and CIBSE LG4. Individual measurements may vary from computer predictions.

Electrical System Requirements: Refer to Amperage Draw Chart and/or the **"Musco Control System Summary"** for electrical sizing.

Installation Requirements: Results assume +/- 3% nominal voltage at line side of the ballast and structures located within 3 feet (1m) of design locations.

By: Eric Svenby

File #: 150715-50fc Date: 21-Jan-11

Not to be reproduced in whole or part without the written consent of Musco Lighting. ©1981, 2011 Musco Lighting

Print Date (21/Jan/2011) & Time (12:36)

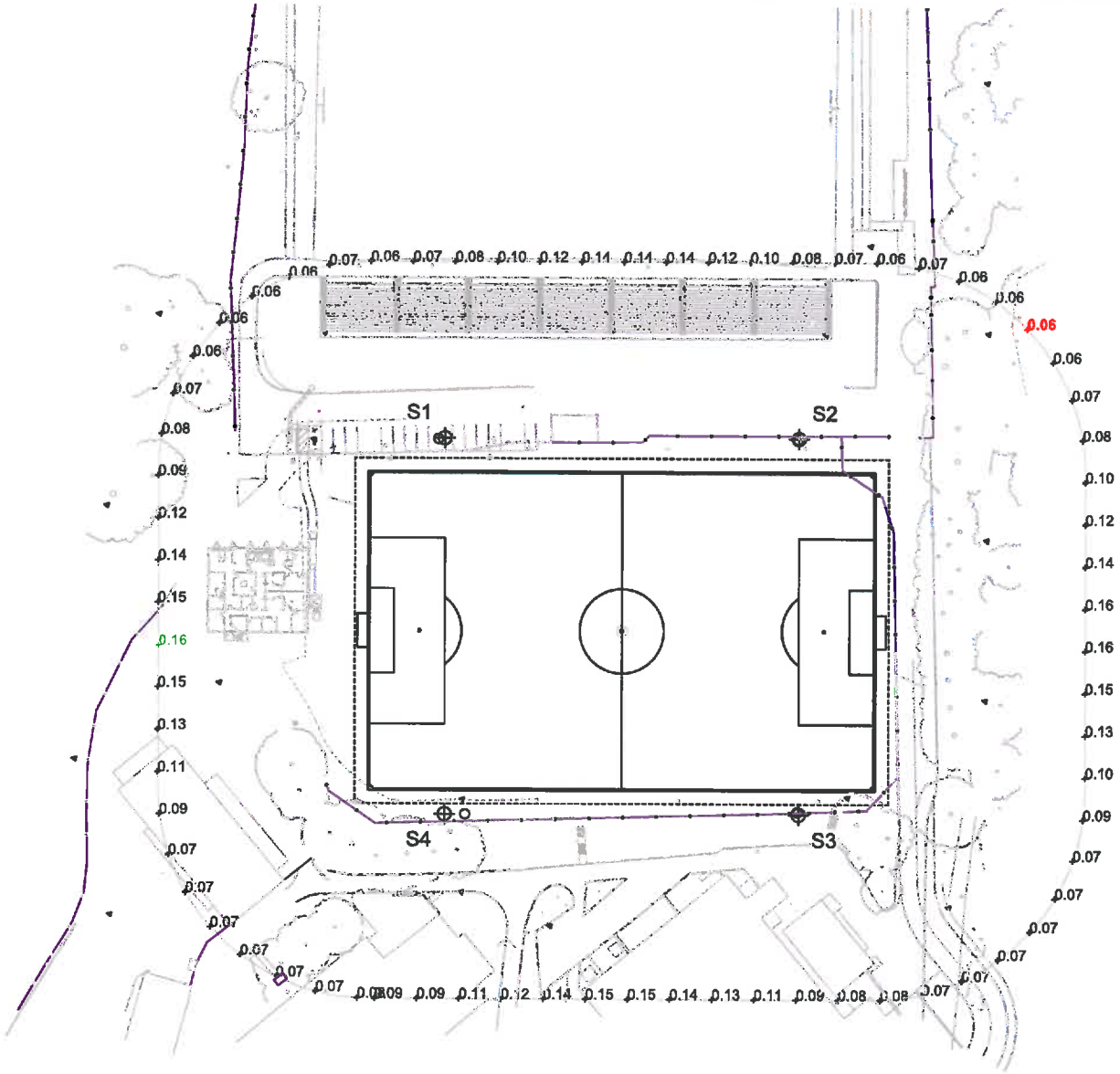

GUARANTEED PERFORMANCE

ILLUMINATION SUMMARY

Upper Field
St Marys Upper Field
Moraga,CA

150' Spill
· Grid Spacing = 30.0'
· Values given at 3.0' above grade

· Luminaire Type:	Green Generation
· Rated Lamp Life:	5,000 hours
· Avg Lumens/Lamp:	134,000

CONSTANT ILLUMINATION HORIZONTAL FOOTCANDLES

	Entire Grid
No. of Target Points:	71
Average:	0.097
Maximum:	0.16
Minimum:	0.06

Average Lamp Tilt Factor:	1.000
Number of Luminaires:	48
Avg KW over 5,000:	75.07
Max KW:	81.6

Guaranteed Performance: The CONSTANT ILLUMINATION described above is guaranteed for the rated life of the lamp.

Field Measurements: Averages shall be +/-10% in accordance with IESNA RP-6-01 and CIBSE LG4. Individual measurements may vary from computer predictions.

Electrical System Requirements: Refer to Amperage Draw Chart and/or the **"Musco Control System Summary"** for electrical sizing.

Installation Requirements: Results assume +/- 3% nominal voltage at line side of the ballast and structures located within 3 feet (1m) of design locations.

SCALE IN FEET 1 : 120
0' 120' 240'

Pole location(s) ⊕ dimensions are relative to 0,0 reference point(s) ⊗

By: Eric Svenby
File #: 150715-50fc Date: 21-Jan-11

Not to be reproduced in whole or part without the written consent of Musco Lighting. ©1981, 2011 Musco Lighting

Print Date (21/Jan/2011) & Time (12:36)

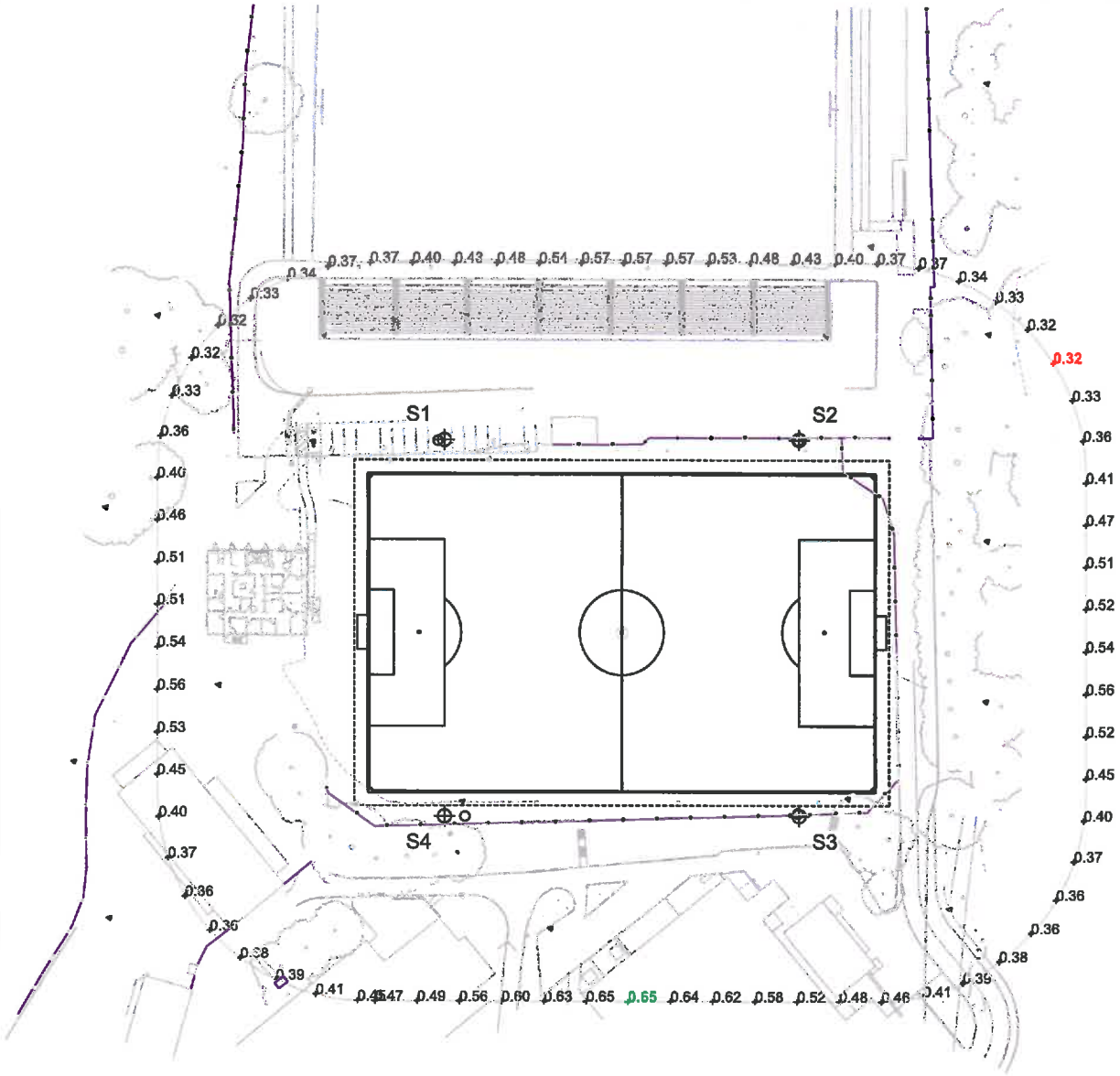

GUARANTEED PERFORMANCE

ILLUMINATION SUMMARY

Upper Field
St Marys Upper Field
Moraga,CA

150' Spill
· Grid Spacing = 30.0'
· Values given at 3.0' above grade

· Luminaire Type:	Green Generation
· Rated Lamp Life:	5,000 hours
· Avg Lumens/Lamp:	134,000

CONSTANT ILLUMINATION
MAX VERTICAL FOOTCANDLES

	Entire Grid
No. of Target Points:	71
Average:	0.449
Maximum:	0.65
Minimum:	0.32

Average Lamp Tilt Factor:	1.000
Number of Luminaires:	48
Avg KW over 5,000:	75.07
Max KW:	81.6

Guaranteed Performance: The CONSTANT ILLUMINATION described above is guaranteed for the rated life of the lamp.

Field Measurements: Averages shall be +/-10% in accordance with IESNA RP-6-01 and CIBSE LG4. Individual measurements may vary from computer predictions.

Electrical System Requirements: Refer to Amperage Draw Chart and/or the **"Musco Control System Summary"** for electrical sizing.

Installation Requirements: Results assume +/- 3% nominal voltage at line side of the ballast and structures located within 3 feet (1m) of design locations.

SCALE IN FEET 1 : 120
0' 120' 240'

Pole location(s) ⊕ dimensions are relative to 0,0 reference point(s) ⊗

By: Eric Svenby
File #: 150715-50fc Date: 21-Jan-11

Not to be reproduced in whole or part without the written consent of Musco Lighting. ©1981, 2011 Musco Lighting

Print Date (21/Jan/2011) & Time (12:36)

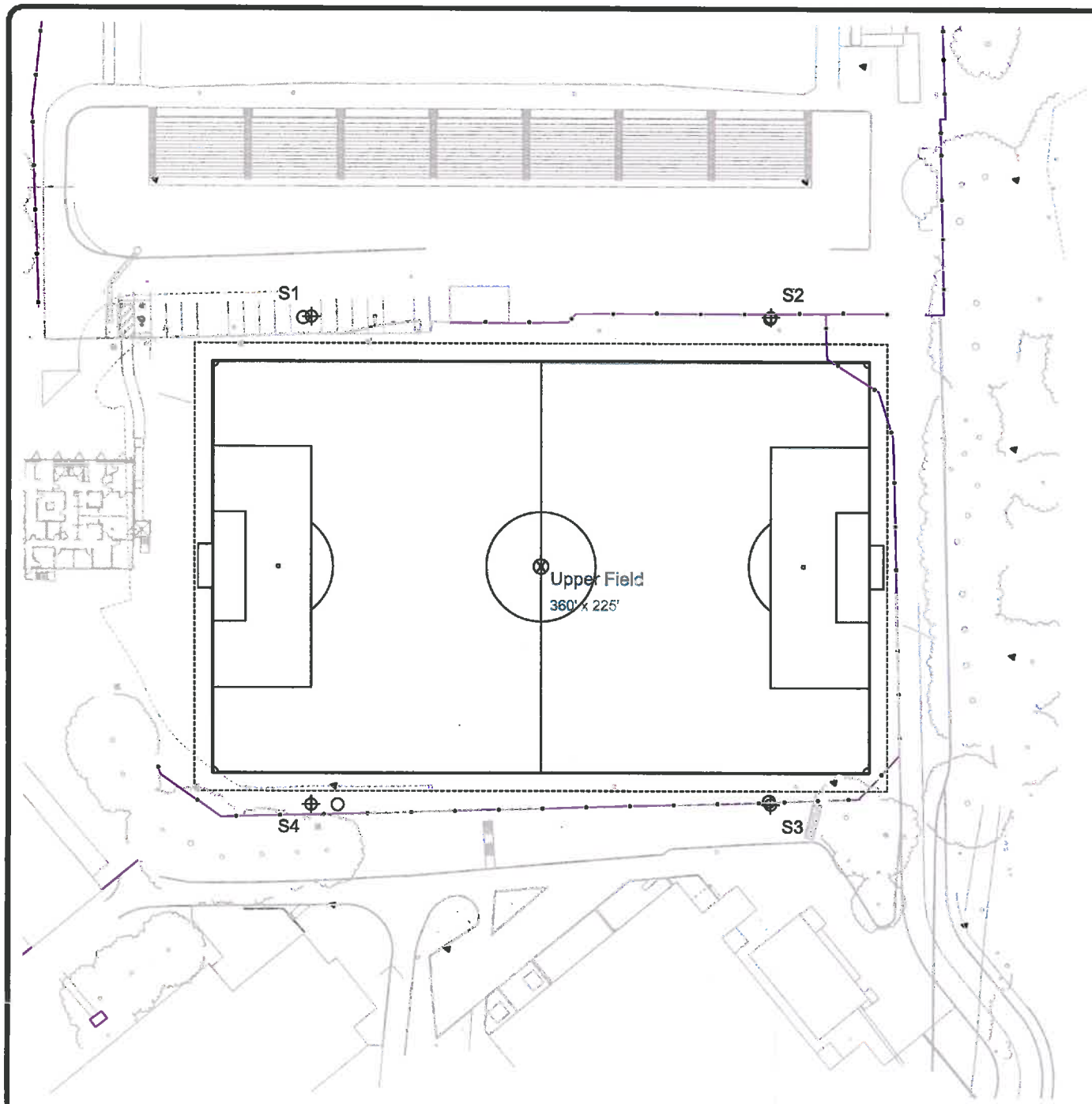

SCALE IN FEET 1 : 80

0' 80' 160'

Pole location(s) ⊕ dimensions are relative to 0,0 reference point(s) ⊗

MUSCO GREEN GENERATION LIGHTING™

GUARANTEED PERFORMANCE

EQUIPMENT LAYOUT

St Marys Upper Field
Moraga,CA

INCLUDES:
· Upper Field

Electrical System Requirements: Refer to Amperage Draw Chart and/or the **"Musco Control System Summary"** for electrical sizing.

Installation Requirements: Results assume +/- 3% nominal voltage at line side of the ballast and structures located within 3 feet (1m) of design locations.

EQUIPMENT LIST FOR AREAS SHOWN

Pole				Luminaires		
QTY	LOCATION	SIZE	GRADE ELEVATION	MOUNTING HEIGHT	LAMP TYPE	QTY / POLE
4	S1-S4	70'	-	70'	1500W MZ	12
4	←TOTALS→					48

SINGLE LUMINAIRE AMPERAGE DRAW CHART

Ballast Specifications (.90 min power factor)	Line Amperage Per Luminaire (max draw)								
Single Phase Voltage	120 (60)	208 (60)	220 (60)	240 (60)	277 (60)	347 (60)	380 (60)	415 (50)	480 (60)
1500 watt MZ	15.0	8.6	7.7	7.5	6.5	5.1	4.7	-	3.7

By: Eric Svenby

File #: 150715-50fc Date: 21-Jan-11

Not to be reproduced in whole or part without the written consent of Musco Lighting. ©1981, 2011 Musco Lighting

Print Date (21/Jan/2011) & Time (12:36)

Typical Light–Structure Green™ System Detail – 12 Luminaires

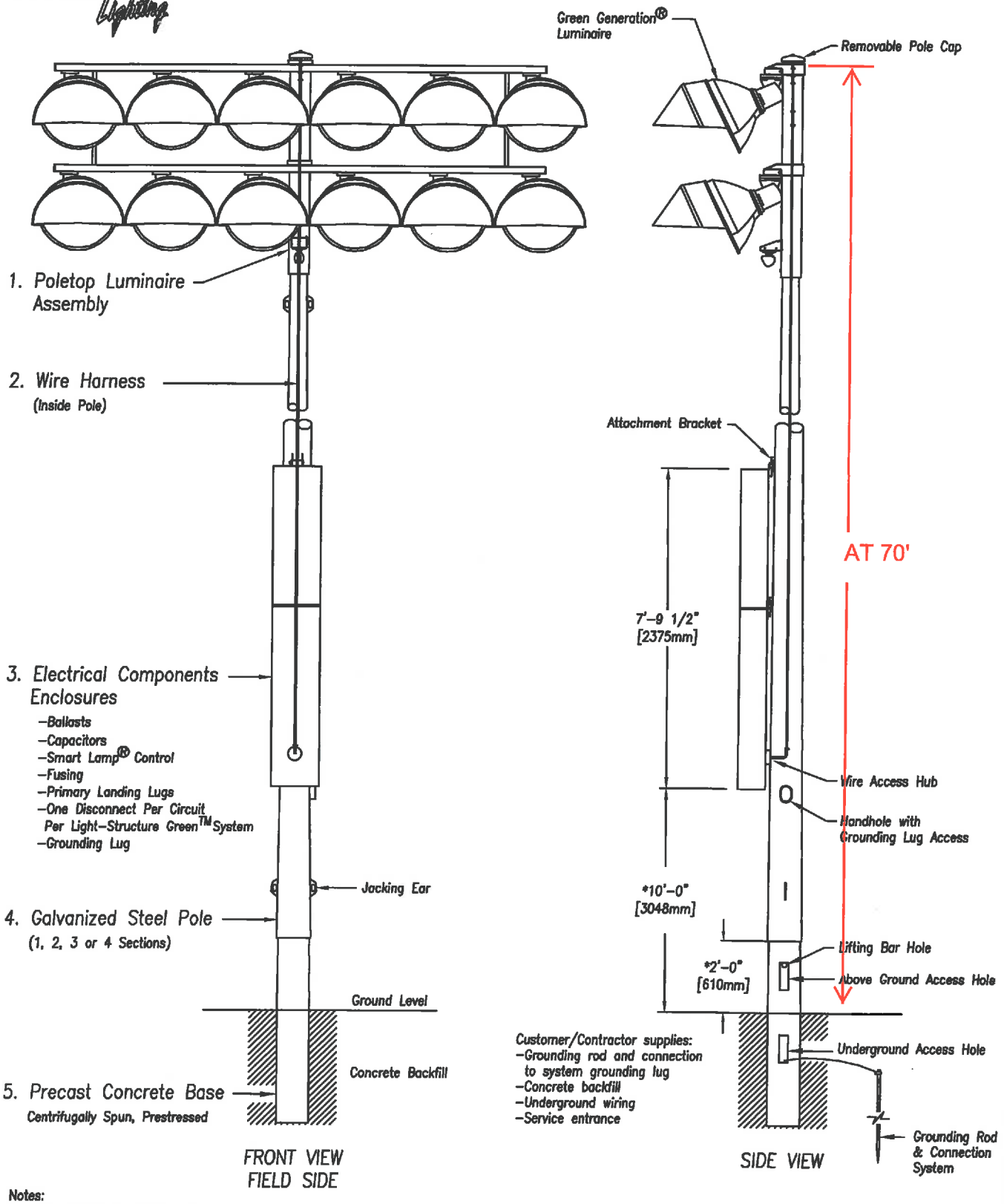

Notes:
1. This drawing is not to scale.
2. * This dimension for reference only. Variances may occur depending on steel pole tolerances, concrete tolerances, galvanizing thickness, hole depth accuracy.
3. Musco provides a base installation bar, an installation level modified for taper, and installation wedges.
4. Provisions for auxiliary equipment such as speaker or security lighting can be incorporated.
5. Copyright 1991, 2007, 2008 Musco Lighting. Patents issued and pending.

LSG–12

EXHIBIT C

APPLICABLE DEVELOPMENT GUIDELINES FROM MMC SECTION 8.132.050,

APPLICABLE DESIGN REVIEW GUIDELINES FOR SCENIC CORRIDORS AND EXTERIOR LIGHTS.

EXHIBIT C

APPLICABLE DEVELOPMENT GUIDELINES FROM MMC SECTION 8.132.050 – SCENIC CORRIDORS

Development or improvements within a major scenic corridor and subject to regulation under Section 8.132.040 shall comply with the following guidelines:

1. The design and location of each building and landscaping shall create a compatible visual relationship with surrounding development and with the natural terrain and vegetation. Road widths and road configurations should be considered as part of the design element.
   Comment: There are no new buildings or roads proposed with this project. The most significant features will be the 25-foot high by 60-foot long "batter's eye" wall and 25-foot high by 35-foot long scoreboard at the new baseball field and the four 70-foot high light poles at the multi-use athletic field. The plans include a new row of closely spaced redwood trees to screen the back side of the "batter's eye" and scoreboard from the St. Mary's Road scenic corridor. The existing trees within the Las Trampas creek and Lake La Salle area screen the direct view of the new light poles from view along the Bollinger Canyon Road scenic corridor. In order to help mitigate the appearance of the 8-foot high chain link fence around the baseball field, the College proposed to have a green mesh windscreen material on the outside of the fence.

2. Buildings and landscaping shall be so located that each does not create a walled effect along the scenic corridor. Setbacks and building heights may be made more restrictive than otherwise permitted by the applicable zoning regulations. In general, the greater the mass or bulk, the greater the setback should be. The positioning of buildings shall be varied in order to create a complimentary relationship between mass and void.
   Comment: Both the multi-use athletic field and the new baseball field are located more than 300-feet from the scenic corridor roadways. The new row of redwood trees will be about 315-feet from St. Mary's Road and will not create a walled effect along the scenic corridor. A mock-up of the 8-foot high outfield fencing along the main entrance drive to the College was erected on March 23rd and photos of the mock-up are included in ***EXHIBIT B****, with the staff report on the baseball field. The 70-foot setback between the entrance drive and the fence appears to be sufficient to prevent a walled effect along this road.*

3. Existing topography, vegetation and scenic features of the site shall be retained and incorporated into the proposed development wherever possible. Manmade structures, as a visual element in the scenic corridor, should be secondary in importance to natural growth.

Comment No existing trees or other scenic features will be removed for this project. The only vegetation that will be removed is the existing turf on the two playing fields: The new turf at the baseball field will be natural grass and the turf at the multi-use athletic field will be replaced with synthetic turf. As stated under item 1, above, a row of redwood trees will be planted to mitigate the visual appearance of the "batter's eye" and the scoreboard. Redwood trees are fast growing and they should reach a height of 25-feet within five or six years if they are planted and maintained well. The row of redwood trees may have to be thinned out as the trees mature, since the plans show very close spacing of the trees for initial screening.

4. Each structure or feature reviewable under this chapter shall be limited to scale and siting to reduce visual dominance or obstruction of existing landforms, vegetation, water bodies and adjoining structures.
   Comment: The proposed heights of the fences and netting around the baseball field is necessary primarily to meet safety standards. The height of the lights is necessary to achieve a uniform lighting intensity on the field. The lights have hoods to limit the scatter of light beyond the field.

5. Each structure shall be constructed, painted and maintained and all planted material shall be planted and maintained to complement and enhance scenic views and the natural landscape.
   Comment: The draft action memorandum includes some specifications for installation and maintenance of the redwood trees intended for the screening of the "batter's eye" and scoreboard.

6. Unnatural and conflicting aesthetic elements shall be eliminated to the extent feasible consistent with safety requirements (for example, retain street lighting, but place wiring underground). Where it is not possible to locate such a feature out of view, it must be located in an area so as to minimize visibility from a scenic corridor or screened from view by planting, fence wall or berm. Where the screen consists of a fence, wall or berm, it may not be higher than six feet. Screening shall consist of primarily natural materials rather than solid fencing. Preference shall be given vegetation in conjunction with a low earth berm.
   Comment: The 8-foot high padded fence is a safety requirement around the outfield of the baseball field. This fence is 315-feet from the scenic corridor and will be partially screened from view by existing trees and shrubs along the St. Mary's Road scenic corridor. The power for the new lights at the multi-use athletic field will be underground. The light poles will be screened from vehicles on Bollinger Canyon Road by the numerous trees in the Las Trampas Creek area. Only one of the light poles is within 500-feet of Bollinger Canyon Road.

7. Lighting shall be compatible in type, style and intensity to the surrounding elements and not cause undue or aggravating disruption, glare a brightness.
   Comment: There are no existing lights at the Saint Mary's Stadium or on any other playing field at the college. The proposed "Green Generation" lights have

been designed with hoods to limit the spillage of light beyond the field. The average light level on the field will be 50 footcandles. The specifications for the lights show that the average footcandles measured 150-feet from the multi-use athletic field will be .097.

8. Grading or earth-moving shall be planned and executed in such manner that final contours appear consistent with a natural appearing terrain. Finished contours shall be planted with plant materials native to the area so that minimum care is required and the material is visually compatible with the existing ground cover.
   Comment: The "grading" within the scenic corridor areas will essentially remain unchanged, with the final contours very consistent with the existing contours. The proposed redwood trees for the screening of the "batter's eye and scoreboard are considered a "native" tree to Moraga. The existing redwood trees planted between St. Mary's Road and the soccer field appear to be growing nicely and seem to be well suited to the area.

9. The number of access points to and from the scenic corridor shall be minimized consistent with safety and circulation needs.
   Comment: There will be no new access points to and from the scenic corridors.

10. Parking on the scenic corridor roadways should be minimized.
    Comment: There will be no parking on the scenic corridor roadways.

11. Each specimen tree and each grove of trees may be approved for removal only if the tree or grove of trees is unsafe or diseased or to provide the smallest cleared area necessary to locate an approved road or structure on the site under guidelines of the tree preservation ordinance. Selective clearing of vegetation may be permitted upon review and approval by the design review board.
    Comment: No trees of any kind will be removed for the upgrades to the multi-use athletic field, the relocation of the baseball field or for the grading at the "strip borrow" site.

12. In applying these guidelines, consideration shall be given to protecting the privacy and security requirements of individual property owners who seek approval for improvements under this chapter.
    Comment: The current plan for relocation of the baseball field calls for 8-foot chain link fencing around the entire perimeter of the field. Eventually a baseball stadium building will be build behind the backstop and future plans show a recreation center and swimming pool at the current location of the existing baseball field. Some of the fencing required for security around the baseball field will be removed when these future structures are built.

SCENIC CORRIDOR DESIGN GUIDELINES

6 ENHANCE TOWN'S SCENIC CORRIDORS (SC)

APPLICABLE TO ALL SCENIC CORRIDOR DEVELOPMENT

The major scenic corridors designated in the General Plan include: Bollinger Canyon Road, Camino Pablo, Canyon Road, Donald Drive (along the ridgeline of Mulholland Hill), Moraga Road, Moraga Way, Rheem Boulevard, and St. Mary's Road. The purpose of these guidelines is to provide further criteria for development that is visible from a major scenic corridor.

SC1 Medians in scenic corridors should be planted and landscaped except where drivable medians are necessary. See Appendix B for recommended plants and Appendix C for conceptual examples for aesthetic enhancement.
Comment: There are no medians or new roads proposed for this project.

SC2 Wide and curved trails should be used along scenic corridors instead of sidewalks wherever possible. Both trails and sidewalks should be separated from roadways with plantings. See Appendix C.
Comment: There is already a major paved trail on the northwest side of St. Mary's Road, which connects with the sidewalk along the northeast side of the entrance road into the College. There is a marked crosswalk between the trail and the internal sidewalk on the campus.

SC3 A greenbelt should be established between the scenic corridor major road and a parking area or building that is located adjacent to the road. The greenbelt must be landscaped and appear to be natural (i.e. a high percentage of the ground area could be a mounded redwood bark or stone covered area as long as plants provide a reasonable amount of massing to create a screening effect). All landscaped areas shall be appropriately irrigated to maintain healthy plants while preventing runoff from over watering.
Comment: No new parking or buildings are proposed with this project. The left outfield fence is located 315-feet back from the St. Mary's Road scenic corridor. The greenbelt between the baseball field and St. Mary's Road is quite substantial. The forest of trees in the Las Trampas creek channel serves as a greenbelt between Bollinger Canyon Road and the multi-use athletic field.

SC4 Trees should be planted on medians and along scenic corridors except where traffic views are blocked. Where tree planting next to scenic corridors is otherwise not possible, planters for trees should be located in street parking zones. See Appendixes B and C. Native grass areas are acceptable along the scenic corridor where formal landscaping is inappropriate.
Comment: There is ample planting along both the St. Mary's Road scenic corridor and the Bollinger Canyon Road scenic corridor at the present time.

SC8 Greenbelts should have a balance of high and low plants to give a natural look to the landscaped area. At no time will a landscaped area (other than grass) exceed 50 lineal feet along the scenic corridor road without a change in massing, character, and color.
Comment: The existing landscaping and natural vegetation along the frontage of the Saint Mary's College campus is consistent with this guideline.

SC9 Religious or educational institutions, apartment complexes, professional buildings, commercial buildings, and residences along scenic corridors should have a minimum 15-foot greenbelt depth to the property line at adjacent streets (exclusive of sidewalk) with moderate landscaping.
Comment: The width of the greenbelt across the frontage of Saint Mary's College exceeds the 15-foot minimum.

SC10 A property owner may be required to upgrade existing conditions when major work is accomplished on a parcel that is within 500 feet of the center line of a major scenic corridor.
Comment: The upgrades to the multi-use athletic field and the relocation of the baseball field would not be considered "major work" that would require upgrading other existing features in the scenic corridors.

SC11 In order to enhance the landscaping along designated scenic corridors, new development within 500 feet of these corridors should include trees and shrubs from one of the palettes in Appendix B. The Town of Moraga encourages planting of native species over non-native species and encourages applicants to refer to the Native Plant Society website at www.nps.org to check that the plants that you select are not invasive species.
Comment: Redwood trees are included on the "Redwood Palette" in Appendix B of the Design Guidelines. They are also a native species in Moraga and are especially appropriate in the low valley areas near streams.

SC14 Signage, bus shelters, monuments and other site elements should be of semi-rural character and be rustic looking, preferably stone. See Appendix C.
Comment: No bus shelters, monuments or signs are proposed with the project.

SC16 Design shall be consistent with the Moraga Municipal Code Section 8.132. (See attached Development Guidelines from MMC Section 8.132.050-B)
Comment: The Development Guidelines were discussed previously in this analysis.

SC17 Viewsheds, including but not limited to close up and distant views, ridgelines, hillsides and mature native tree groupings should be protected along the Town's scenic corridors to retain the Town's semi-rural character.
Comment: Saint Mary's College wants to maintain a 70-foot view corridor on either side of the main entrance road to preserve views of the Chapel from the scenic corridor.

ID1-7 APPLICABLE TO ALL DEVELOPMENT

ID3 Wind barriers, shade, sound absorption, dust abatement, glare reduction, and proper drainage should be provided on site.
Comment: The new lights at the multi-use athletic field have hoods to reduce glare. The average footcandles at a distance of 150-feet from the field will only be .097. Dust abatement conditions have been included in the draft action memorandum. A condition has also been included that addresses the placement of speakers at both the multi-use athletic field and the baseball field to avoid broadcasting music or announcements towards residential areas adjacent to the College. The drainage for the project will be reviewed by the Town Engineer.

ID6 The level of lighting should not exceed the needs for security and safety or detract from the aesthetics of the development.

a. Outdoor lighting should be related to the design of the structure.
b. Outdoor light fixtures should be designed and mounted so that the source of light has minimal impact off site.
c. Outdoor lighting should be directed inward toward the property and may require additional screening to avoid spillage onto adjacent residential properties.

Comment: There is no proposed lighting for the baseball field. The "Green Generation" lighting for the multi-use athletic field will have uniform average lighting over the field of 50.1 footcandles and the light is directed downward on the surface of the field by hoods over the lamps. Spillage of light onto adjacent residential properties is not expected since the level of light will drop to an average of only 0.97 footcandles at a distance of 150-feet from the multi-use playing field.

EXHIBIT D

APPLICABLE TOWN DESIGN GUIDELINES FOR GRADING

EXHIBIT D

DESIGN GUIDELINES APPLICABLE TO GRADING AT SAINT MARY'S COLLEGE

3 MAINTAIN THE TOWN'S SEMI-RURAL CHARACTER (SRC)

APPLICABLE TO ALL TYPES OF DEVELOPMENT

SRC7 New trees should be planted to compliment the natural pattern of tree placement.
Comment: New redwood trees will be planted to help screen the batters eye and score board at the relocated baseball field. Existing trees along the south side of the multi-use athletic field and Saint Mary's Stadium adequately screen the view of the "strip borrow" area on the hillside above the Stadium.

SRC8 Mature native tree groupings should be protected.
Comment: No existing trees will be removed for the proposed grading.

SRC9 Improvements should be sited away from creeks to enhance safety and to protect existing drainage patterns, riparian habitat, and wildlife.
Comment: The proposed grading for replacement of the natural grass turf with synthetic turf at the multi-use athletic field, the relocation of the baseball field and the "strip borrow" site on the hillside above the Stadium does not encroach into any riparian habitat area.

4 PROTECT RIDGELINES AND HILLSIDE AREAS (RH)

APPLICABLE TO ALL RIDGELINE AND HILLSIDE CONSTRUCTION

RH2 New development should be sited in areas that are least sensitive in terms of environmental and visual resources, including areas of flat or gently sloping topography.
Comment: The multi-use athletic field and the new baseball field are located on level ground. The "strip borrow" site is on a gently sloping hillside area above the Stadium with an average slope of approximately 10.6%.

RH3 In hillside and ridgeline areas, building sites should be sited so that visual impacts are minimized.
Comment: No buildings are proposed on hillside or ridgeline areas.

RH6 Hillside grading shall blend with natural slopes and be contoured to achieve a natural appearance. The use of retaining walls and other man-made grading features to mitigate geologic hazards should be avoided.
Comment: No retaining walls are proposed with the grading and the 3:1 slope proposed at the cut into the hill at the "borrow" site has curved contours that achieves a natural appearance.

RH10 Preserve both close-up and distant views of the natural hillside and ridgeline landscape as seen from valley areas.

Comment: Close-up and distant views of the natural hillside and ridges behind Saint Mary's College will not be changed by the proposed grading or relocation of the baseball field. The College intends to maintain a 70-foot wide view corridor on either side of the main entrance drive to preserve the views of the Chapel from the St. Mary's Road scenic corridor.

ID1-7 APPLICABLE TO ALL DEVELOPMENT

ID1 Downhill or uphill portions of any project shall provide landscaped treatment to address potential erosion, to be in harmony with adjacent developments, and to provide a complimenting view from distant horizons. Dense native landscaping should be used to blend hillside structures with the natural setting.

Comment: The project plans include erosion control plans. There are no structures proposed on hillside areas with this project. Recommended conditions of approval for the project include standard dust abatement conditions for grading operations.

ID5 Geologic hazards shall be addressed:

a. Construction should not take place in geologic hazard areas identified as landslides, springs, or earthquake fault zones.
b. Risk of off-site geologic property damage should be minimized by locating development away from areas which are vulnerable to slope failure.
c. Professional evaluation of soil conditions and potential geologic hazards should be completed for all new homes.

Comment: The project Geotechnical Engineer has determined there is no hazard represented by the excavation at the borrow site and the resulting 3:1 cut slope. The Town has requested Cal Engineering and Geology, Inc. to review and confirm this conclusion. The approval of the grading permit will be contingent upon confirmation that the proposed 3:1 slope will not present a slope stability problem.

ID10 GRADING

ID10.1 Grading for any purpose may be permitted only in accordance with an approved development plan that is found to be geologically safe and aesthetically pleasing.

Comment: The grading at the "strip borrow" site will have gently rounded contours and appear natural. There is no significant change to the grades for either the multi-use athletic field or the new baseball field. See ID5 for comments with regard to the geotechnical stability of the hillside.

ID10.3 When the pre-development slope is greater than or equal to 20%, development shall be avoided, but may be permitted if supported by site-specific analysis. When grading land with a slope of 20% or more, soil displacement and retaining wall use shall be minimized by using contour grading techniques. In MOSO areas, development shall be prohibited on slopes with an average gradient of 20% or greater. Design shall be consistent with Moraga Municipal Code Title 14.

Comment: The slopes on the "strip borrow" site are generally less than 20% and both the temporary and final organic material stockpiles will be placed on land with a slope less than 10%. It has been recommended in the draft conditions that the grading contractor shall take precautions to avoid the placement of any organic material on slopes steeper than 10%. The property is not zoned as MOSO.

ID10.5 Cut slopes should be placed behind buildings or other structures where they will be screened.

Comment: The cut slope for the "borrow" site will not be generally visible due to the existing trees along the south side of the Saint Mary's Stadium and the Multi-use Athletic Field.

ID10.6 Preserve the natural topography of the land, especially at the horizon:

- Round off graded slopes, in a manner that conforms to the natural contours of the land and to the surrounding terrain. Sharp angles produced by earth moving, specifically at the top and toe of graded slopes shall be avoided.
- Slopes shall be contour graded to achieve a natural appearance.
- Slopes shall be blended with the contours of contiguous properties and create a smooth transition.
- Grading shall minimize scars due to cuts, fills, and drainage benches on natural slopes.

Neither cuts nor fills shall result in slopes steeper than 3:1 (horizontal to vertical), except where natural slopes are steeper. Where steeper slopes are unavoidable, special mitigation measures shall be incorporated into the design construction and maintenance of the slopes.

Comment: The grading of both the multi-use athletic field and the baseball field will be practically level. The hillside grading at the "strip borrow" site will have contour grading to appear natural. The cut into the hill for the fill needed on the ball fields will be no steeper than 3:1. The natural slope above the cut is 2:1 or steeper.

ID12 STORMWATER GUIDELINES

ID12.2 Regulations set forth by the San Francisco Bay Regional Water Quality Control Board (RWQCB) shall apply to all new or redeveloped residential and commercial projects:

a. If the project creates or replaces more than 10,000 square feet of impervious surface;
b. Relative to the 10,000 square foot threshold, if 50% or more of the existing impervious surface is replaced then 100% of the site must comply with Provision C.3 of the Town's Stormwater Permit; or
c. Relative to the 10,000 square foot threshold, if less than 50% of the existing impervious surface is replaced, then Provision C.3 of the Town's Stormwater Permit only applies to said portion.

Comment: The project is not subject to the C.3 requirements because it does not create any additional impervious surface area. The new synthetic turf at the multi-use field will be permeable, with gravel and drainage pipes below the field. The baseball field will have natural grass over most of the field and native grasses will be encouraged to grow over the area disturbed at the "strip borrow" site.

ID12.4 Drainage should follow natural flow patterns and, where appropriate, plans should develop wide area flow patterns, rather than concentrating flow at one point.

Comment: Basically, the existing natural flow patterns will not be changed. A new retention basin will be added behind the left outfield fence at the baseball field. Erosion control will be installed on the hillside below the grading at the "strip borrow" site until the area has been completely re-vegetated.

ID12.5 In new development only BMP-treated stormwater shall be discharged into the Town's storm drain system.

Comment: The drainage plans will be reviewed by the Town Engineer for compliance with the required BMP's.

ID12.6 A sufficient number of drains should be provided for retaining wall backdrains and in the crawl space under the foundation to provide an outlet for water that may accumulate behind retaining walls and beneath the house and to drain any areas that may be divided by internal grade beams. Such drainage facilities shall be directed to a landscape area or manufactured treatment system prior to connecting to the storm drain system. Design shall be consistent with the Moraga Municipal Code section 13.04.060d.

Comment: No retaining walls are proposed at the multi-use athletic field, the new baseball field or at the "strip borrow" site.

EXHIBIT E

DRAFT ACTION MEMORANDUM

DRAFT

Town of Moraga

PLANNING DEPARTMENT
329 RHEEM BOULEVARD
MORAGA, CA 94556
(925) 888-7040

DESIGN REVIEW BOARD ACTION MEMORANDUM

On March 28, 2011, the Town of Moraga Design Review Board considered the application described below:

> **DRB 01-11 and GP 11-02 Ron Tapper (Applicant), Saint Mary's College of California (Owner) Multi-Use Playing Field Upgrade at 1928 Saint Mary's Road:** Application for conversion of a grass athletic field to a synthetic turf playing field located west of the Saint Mary's Stadium and east of McKeon Pavilion. The improvements to the playing field also include four new 70-foot high light poles with 12 lights on each pole. Grading for the project includes removal of approximately 1,800 cubic yards of soil with the turf strippings placed on an organic material stockpile located on the hillside south of the stadium. APN 258-150-006 and 258-140-001

DESIGN REVIEW BOARD ACTION:

The DESIGN REVIEW BOARD hereby grants approval for the upgrades to the multi-use athletic field, including the new green generation lights and grading permit in accordance with the following findings and conditions of approval:

PART 1: GRADING PERMIT FINDINGS:

In accordance with MMC Section 14.12.030 on average slopes less than twenty five (25) percent, the grading permit may be granted by the Design Review Board with a determination that the grading is:

1. Consistent with the Town Design Guidelines;
   Finding: *The grading projects for the upgrades to the multi-use athletic field and relocation of the baseball field are consistent with the Town's grading design guidelines. The topography and elevation of the playing fields will not change significantly. The placement of the fill on the hillside "strip borrow area" south of the Saint Mary's Stadium will conform to the natural contours of the hillside and the*

grading in this area is substantially screened from view behind existing trees. The "strip borrow area" will be graded in a manner that is consistent with the Town's Design Guidelines.

2. Consistent with the regulations of Chapter 14.12 MMC (Grading Ordinance);
   Finding: *The proposed final grades for the multi-use athletic field and the relocation of the baseball field will not change significantly. Appropriate detention basins and other drainage features will be implemented to comply with the Town's permit under the Regional Water Quality Control Board and BMP's for stormwater and erosion control. The borrow site and temporary and final organic material stockpile areas on the hillside area south of the Saint Mary's Stadium will involve an excavation into the slope with a new engineered slope of 3:1. The excavation required to provide the fill for the fields results in a slope meeting the maximum slope of 3:1 to conform with the hillside. The deposited strippings and re-contouring of the fill in the borrow site will result in a slope of less than 5% over most of the borrow area toward the hill and a slope of less than 3:1 to meet the contour of the hillside. The slope of both the fill and excavation are consistent with the requirements of Chapter 12.48. Since the borrow area is not intended to support structures, the compaction requirements of Chapter 12.48 do not apply.*

3. Not detrimental to public safety;
   Finding: *Both the multi-use athletic field and the relocated baseball field are essentially level and there will be no slope stability issues with the proposed grading of these fields. The average slope in the area of disturbance for the strip borrow site will be less than 25%. Both the temporary and final organic material stockpiles will be on slopes that are less than 10%, which are exempt from environmental review. The proposed fill sites will not be used for the construction of any buildings or structures and will remain open space. Generally slopes of 20% or less are not susceptible to landslides; therefore, the placement of the organic material stockpiles will not be detrimental to public safety. The project Geotechnical Engineer has determined there is no hazard represented by the excavation at the borrow site and the resulting 3:1 cut slope. The Town has asked Cal Engineering and Geology, Inc. to review and confirm this conclusion.*

4. Not detrimental to stormwater runoff;
   Finding: *The multi-use athletic field will have gravel and a drainage system installed under the pervious synthetic turf. The stormwater runoff from the new surface will be nearly identical to the runoff from the existing turf over heavy clay that exists today The relocated baseball field will have natural grass turf over portions of the in-field and out-field and a retention basin adjacent to the ball field to retain stormwater runoff during peak periods. The plans for the "strip borrow area" on the hillside south of the Saint Mary's Stadium include erosion control plans (sheets C5.1 and C5.2). The area will eventually be completely covered with native grasses.*

5. Consistent with the requirements of Chapter 8.136 MMC (Slope Density – HDP);
   Finding: *"Hillside land" is defined as any land which has a slope of twenty (20) percent of greater. MMC section 8.136.040-B requires a Hillside Development Permit (HDP) for any grading, clearing, construction upon or alteration of hillside*

land. Neither the multi-use playing field nor the relocated baseball field has any slopes over 20%. The existing topography in the "strip borrow area" is generally less than 10%. A HDP is not required provided that none of the turf strippings are deposited on any slope exceeding 20%. The contractor may have to adjust the location of the temporary organic material stockpile further to the southwest to avoid the steeper slope on the northeast side of the stockpile. The existing slope, which is less than 20%, at the southeast side of the "final organic material stockpile area" will be graded with an engineered slope of 3:1 (33.3%). Although the final slope will be steeper than 20%, the original slope is less than 20% and a HDP is not required.

6. Natural Contour Grading;
   Finding: *The proposed grading on the hillside area south of the Stadium has gently rounded contours that conform to the natural slopes and do not look like engineered cuts and fills.*

7. Minimizes Soil Displacement;
   Finding: *The cut and fill from the multi-use playing field, the relocated baseball field and the strip borrow area will be balanced and there will be no off-haul from Saint Mary's College. The turf strippings from the playing fields are the minimum necessary to prepare the areas for the new turf. The quantity of imported drain rock is necessary to meet the requirements of improved drainage and to manage stormwater runoff flows while reducing sediment into local creeks.*

8. Minimizes the use of retaining walls;
   Finding: *The project does not involve the construction of any retaining walls.*

9. Not inconsistent with the general plan.
   Finding: *The project is consistent with applicable General Plan policies, CD1.3 and CD1.4. Saint Mary's College is an existing institution in Town and the upgrades to the multi-use athletic field and the relocation of the baseball field will not adversely impact the Town's semi-rural character or significantly impact the viewshed along the Town's scenic corridors. No ridgelines, mature native tree groupings or other significant natural features will be impacted by the project. Close-up and distant views of the proposed strip borrow area on the hillside south of the Saint Mary's Stadium are blocked by the existing trees along the lower slope of the hill at the southeast end of the Stadium and multi-use playing field.*

PART 2: DESIGN REVIEW FINDINGS:

In accordance with Moraga Municipal Code Section 8.72.080(B), the following findings must be made in order to approve an application for design review in land use districts other than single-family residential:

1. The proposed structure conforms with good taste, good design and in general contributes to the character and image of the Town as a place of beauty, spaciousness, balance, taste, fitness, broad vistas, and high quality because the appearance of the multi-use athletic field will not change substantially with the new synthetic turf. The primary change will be the addition of the four new light poles with 12 hooded Green Generation luminaires on each pole to light the field at night.

2. The structure will be protected against exterior and interior noise, vibrations and other factors, which may tend to make the environment less desirable because the multi-use athletic field does not have any mechanical equipment to generate noise or vibrations. The new lights would allow the field to be used later in the evening and could potentially generate noise from players on the field later at night. A condition of approval has been included to limit use of the lights to 10:00 p.m. to reduce the impact of noise at night.

3. The exterior design and appearance of the structure is not of inferior quality as to cause the nature of the neighborhood to materially depreciate in appearance and value because the appearance of the multi-use athletic field will not change significantly and the new lights have been designed to direct the light onto the field with minimal scatter beyond the field.

4. The structure is in harmony with proposed developments on land in the general area because the view of the multi-use athletic field is screened from most homes in the vicinity by the trees along the Las Trampas Creek channel and the field is also blocked from view by the Saint Mary's Stadium bleachers.

PART 3: CONDITIONS OF APPROVAL:

1. Any significant changes to the plans for the multi-use athletic field, design of the lights or the grading plans for the project approved by the Design Review Board on March 28, 2011 shall be subject to further review and approval by the Design Review Board.

2. If any exterior speakers for amplified music or broadcasting announcements is added to the multi-use athletic field, the speakers shall be directed towards the south or interior of the college campus and in the opposite direction from Bollinger Canyon Road to reduce any potential noise impact to residents adjacent to the college.

3. The excavation of soil from the borrow site shall not commence until the Town's Geotechnical Peer Review Consultant has concurred with the project Geotechnical Engineer's determination that there is no slope stability hazard due to the proposed 3:1 cut slope into the hillside.

4. The grading contractor shall take precautions to avoid placement of the turf strippings on any slope steeper than 10% for the temporary and final organic material stockpiles.

5. The temporary and final stockpiles of organic material from the turf strippings on the ball fields shall be protected from rain and wind erosion using straw-wattles and straw covering with tackifier.

6. Grading operations shall occur between April 15 and October 15, in order to avoid seasonal rainfall.

7. If the grading operation cannot be completed prior to October 15, a Storm Water Pollution Prevention Plan (SWPPP) and application for an Erosion Control Permit shall be submitted to the Town Engineer for review no later than September 1 and all erosion control measures shall be installed and deemed operational by the project engineer and town's grading inspector prior to October 1.

8. The applicant shall apply for and pay all appropriate fees for the grading permit, erosion control permit, plan checks and inspections and any other applicable fees.

9. Existing plants and grasses in the area to be graded shall be left undisturbed until the grading is ready to commence.

10. The applicant and their grading contractor shall be responsible to prevent erosion of soil due to the grading operations. If inspection by the town shows evidence that sediments have been carried off-site, then the applicant and their contractor shall be required to immediately cleanup the deposits attributed the grading project and to correct the cause of the off-site sediment deposition.

11. The grading operations shall be conducted in such a manner as to minimize the generation of dust. The following dust control measures shall be implemented:

    a. The contractor shall wet down the grading areas and any haul routes used by construction equipment at least twice daily during dry periods or as needed to prevent the generation of excessive dust.

    b. The wheels of hauling trucks and graders shall be washed as needed when exiting the site to prevent tracking excessive dirt onto nearby roadways.

    c. Periodically sweep with water sweepers all paved access roads to the grading and construction site where dirt and dust have settled or where construction vehicles have tracked dirt onto the paving. During construction, cleaning shall occur whenever debris is present on the private drives, v-ditches, or catch basins.

    d. Cover or periodically water exposed stockpiles of dirt or soil.

    e. All disturbed areas shall be replanted with plants and groundcovers and protected from both wind and water erosion upon completion of the grading.

    f. All non-active graded areas shall be protected from erosion and wind exposure by applying hydro mulch with a tackifier.

    g. Any dust producing material shall be covered while being hauled, and storage piles of dust producing material on site shall be covered.

12. During grading operations, the hours of work shall be limited to the hours from 8 a.m. to 5 p.m. Monday through Friday to minimize potential disturbance of adjacent residents. No construction shall occur on weekends or holidays unless an emergency situation develops, such as the potential collapse of a cut slope. In an emergency situation, the Planning Director or Town Engineer may authorize extended work hours on weekdays or on weekends until the situation is no longer deemed an emergency.

13. The Conditions of Approval shall be located in the “Notes” section of the Building Plans.

14. In accordance with MMC Section 14.12.040, the grading permit shall be valid for two years from the date of final action. The approval may be extended for an additional year by the Design Review Administrator, if other approvals required to implement the project are not obtained within one year of the Design Review Board approval.

15. This permit and each condition contained herein shall be binding upon applicant and any transferor, or successor in interest.

Design Review Board action is appealable to the Planning Commission within 10 calendar days after the date of the decision. If you have any questions regarding the action of the Board, please contact the Moraga Planning Department at (925) 888-7040.

EXHIBIT F

PROJECT PLANS FOR THE MULTI-USE ATHLETIC FIELD

GRADING NOTES

1. ALL GRADING, SITE PREPARATION, PLACING AND COMPACTION OF FILL TO BE DONE IN ACCORDANCE WITH CONTRA COSTA COUNTY GRADING ORDINANCE NO. 69–59 AND ALSO UNDER THE DIRECT SUPERVISION OF THE SOILS ENGINEER, AND INSPECTED BY THE GRADING SECTION. SUBSEQUENT TO COMPLETION OF WORK THE SOILS ENGINEER SHALL SUBMIT TO THE COUNTY BUILDING DEPARTMENT A REPORT STATING THAT ALL WORK HAS BEEN DONE TO HIS SATISFACTION.

2. ANY DEVIATION FROM APPROVED PLANS WILL REQUIRE APPROVAL OF THE CONTRA COSTA COUNTY GRADING ENGINEER.

3. CONTRACTOR TO NOTIFY CONTRA COSTA COUNTY GRADING SECTION 48 HOURS PRIOR TO THE START OF WORK.

4. ALL CUT SLOPES SHALL BE ROUNDED TO MEET EXISTING GRADES AND BLEND WITH SURROUNDING TOPOGRAPHY. ALL GRADED SLOPES SHALL BE PLANTED WITH SUITABLE GROUND COVER.

5. DURING GRADING OPERATIONS THE CONTRACTOR SHALL WET DOWN GRADING AREAS AND ANY HAUL ROUTES USED BY TRUCKS AND OTHER HEAVY EQUIPMENT AT LEAST TWICE DAILY TO REDUCE AIRBORNE DUST. IN ADDITION, THE NOISE LEVEL AT THE CONTRACTOR'S OPERATION SHALL BE KEPT TO A MINIMUM AS PER TOWN OF MORAGA SPECIFICATIONS.

6. THE CONTRACTOR SHALL NOTIFY UNDERGROUND SERVICE ALERT (USA) 48 HOURS PRIOR TO ANY EXCAVATION. PHONE (800) 642–2444.

7. SILT AND EROSION CONTROL PLANS REQUIRED DURING RAINY SEASON (OCTOBER 1 THROUGH APRIL 15). PLANS WILL BE REQUIRED IF WORK INCLUDING LANDSCAPING, WILL NOT BE COMPLETED PRIOR TO OCTOBER 15.

8. THE SOILS REPORT ENTITLED GEOTECHNICAL ENGINEERING STUDY, PROPOESD NEW BASEBALL FIELD, ST. MARY'S COLLEGE, MORAGA, CALIFORNIA, BY JENSEN–VAN LIENDEN ASSOCIATES, INC. DATED JANUARY 21, 2001 JOB NO. W167AA SHALL BE MADE A PART OF THESE PLANS.

9. THE CONTRACTOR SHALL BE RESPONSIBLE TO KEEP ALL PUBLIC RIGHT–OF–WAY AND OFF–SITE AREAS CLEAN FROM ALL DIRT, MUD, DUST AND DEBRIS AT ALL TIMES. ANY OFF–SITE DAMAGE TO A TOWN STREET, WHICH IS FOUND BY THE TOWN ENGINEER TO BE THE RESULT OF THE GRADING OPERATION, SHALL BE CORRECTED BY THE APPLICANT CONTRACTOR.

10. IF HUMAN SKELETAL REMAINS ARE ENCOUNTERED DURING CONSTRUCTION, ALL WORK WITHIN 20 METERS OF THE DISCOVERY SHALL BE STOPPED IMMEDIATELY AND THE COUNTY CORONER NOTIFIED. IF THE REMAINS ARE NATIVE AMERICAN, THE CORONER HAS 24 HOURS TO NOTIFY THE NATIVE AMERICAN HERITAGE COMMISSION. IF ANY BURIED CULTURAL REMAINS ARE ENCOUNTERED DURING CONSTRUCTION, ALL WORK WITHIN 20 METERS OF THE DISCOVERY SHALL BE STOPPED UNTIL A PROFESSIONAL ARCHAEOLOGIST IS RETAINED TO DETERMINE THE SIGNIFICANCE OF THE FIND, AND TO RECOMMEND ANY REMEDIAL ACTIONS.

11. CALL SOILS ENGINEER TO INSPECT ALL FILL AND FINISH GRADES.

GENERAL NOTES

1. BENCHMARK: #KG3, ST. MARY'S COLLEGE GRID SYSTEM, STANDARD STREET MONUMENT WITH BRASS DISK SET IN CENTER OR ROADWAY OF PERIMETER LOOP ROAD AT MOST NORTHERLY CORNER THEREOF, SOUTHERLY OF DE LA SALLE INSTITUTE ELEVATION: 609.11.

2. THE CONTRACTOR IS RESPONSIBLE FOR THE PROTECTION OF ALL UNDERGROUND UTILITIES WHICH INCLUDE, BUT ARE NOT LIMITED TO: ELECTRICAL, GAS, WATER, IRRIGATION, SANITARY AND STORM SEWERS, CONTRACTOR SHALL OBTAIN A UTILITY MAP FORM THE COLLEGE ARCHITECT SHOWING APPROXIMATE LOCATION OF UTILITY LINES.

3. ALL STREET IMPROVEMENTS SHALL BE CONSTRUCTED IN ACCORDANCE WITH THE PROVISIONS OF TITLE 9 OF THE CURRENT COUNTY ORDINANCE CODE, COUNTY STANDARD SPECIFICATIONS, AND STANDARD PLANS.

4. ALL UNDERGROUND UTILITIES INCLUDING MAINS AND LATERALS SHALL BE INSTALLED AND BACKFILL COMPLETED PRIOR TO THE START OF CURB, SIDEWALK AND PAVING CONSTRUCTION.

5. THE CONTRACTOR SHALL NOTIFY UNDERGROUND SERVICE ALERT, (800) 642–2444, 48 HOURS PRIOR TO ANY EXCAVATION. THE USE AUTHORIZATION NUMBER SHALL BE KEPT AT THE JOBSITE.

6. SHOULD IT APPEAR THAT THE WORK TO BE DONE, OR ANY MATTER RELATIVE THERETO, IS NOT SUFFICIENTLY DETAILED OR EXPLAINED IN THESE PLANS, THE CONTRACTOR SHALL CONTACT SCHELL & MARTIN, INC. AT (510) 283–8111 FOR SUCH FURTHER EXPLANATIONS AS MAY BE NECESSARY.

7. THE THICKNESS OF SUBBASE, BASE AND SURFACING TO BE DETERMINED IN ACCORDANCE WITH THE REQUIREMENTS OF TITLE 9 OF THE COUNTY ORDINANCE CODE. PAVEMENT SECTIONS SHALL BE BASED ON R–VALUES DETERMINED BY SOILS ENGINEER AND SHALL BE REVISED BY THE COUNTY PUBLIC WORKS DEPARTMENT PRIOR TO PLACEMENT OF ANY MATERIAL.

8. ALL PAVED SURFACES WILL BE SUBJECT TO AIR PERMEABILITY TESTS IN ACCORDANCE WITH ORDINANCE CODE 96–4,202. BASED ON THESE TESTS, ADDITIONAL PAVEMENT TREATMENT MAY BE NECESSARY.

9. IF PAVING AND STORM DRAIN IMPROVEMENTS ARE NOT COMPLETED BY OCTOBER 15, TEMPORARY SILT AND DRAINAGE CONTROL FACILITIES SHALL BE INSTALLED TO CONTROL AND CONTAIN EROSION–CAUSED SILT DEPOSITS AND TO PROVIDE FOR THE SAFE DISCHARGE OF STORM WATERS INTO EXISTING STORM WATER FACILITIES. DESIGN OF THESE FACILITIES MUST BE APPROVED BY THE BUILDING INSPECTION DEPARTMENT.

10. THE THICKNESS OF SUB BASE, BASE AND SURFACING TO BE DETERMINED BY THE COUNTY PUBLIC WORKS DEPARTMENT BASED ON TRAFFIC INDEX AND SOIL TEST FOR "R" VALUE.

11. ALL TRAFFIC STRIPING AND MARKINGS SHALL BE THERMOPLASTIC UNLESS THE PLANS DESIGNATE THE USE OF "TRAFFIC PAINT."

12. COUNTY STANDARD PLANS SHALL INCLUDE, BUT ARE NOT LIMITED TO, THE FOLLOWING:

- CC 3010 INLET FRAMES, GRATES
- CC 3022 TYPE "III" MANHOLE BASE

DRAWING INDEX

SHEET C0.0	GENERAL NOTES, VICINITY MAP, SHEET INDEX, ABBREVIATIONS, LEGEND
SHEET C1.0	EXISTING SITE TOPOGRAPHY
SHEET C2.0	SITE CONTEXT MAP
SHEET C3.0	STORM WATER MANAGEMENT PLAN
SHEET C4.0	GRADING AND DRAINAGE PLAN
SHEET C4.1	STORM DRAIN PLAN
SHEET C5.0	BORROW AREA GRADING PLAN
SHEET C5.2	EROSION AND SEDIMENTATION CONTROL PLAN BORROW AREA
SHEET C5.3	EROSION AND SEDIMENTATION NOTES AND DETAILS

VERDE DESIGN INC. FIELD CONSTRUCTION DOCUMENTS

SHEET L4.0	GRADING PLAN
SHEET L5.0	DRAINAGE AND UTILITY PLAN
SHEET L7.0	MATERIAL PLAN

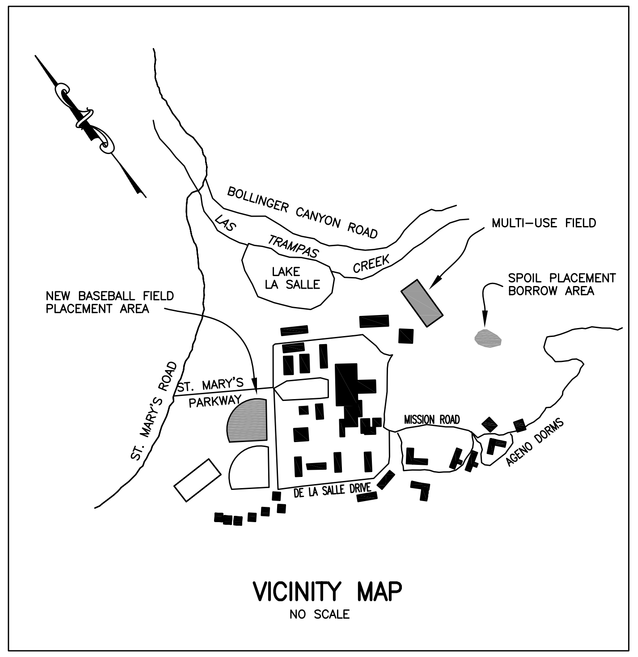

VICINITY MAP
NO SCALE

LEGEND AND ABBREVIATIONS

AD	AREA DRAIN
ASPH	ASPHALT
APN	ASSESSORS PARCEL NUMBER
BLDG	BUILDING
BW	BLACK WALNUT
CB	CATCH BASIN
CIP	CAST IRON PIPE
CMP	CORRUGATED METAL PIPE
CO	CLEAN OUT
CONC	CONCRETE
DS	DOWN SPOUT/ROOF LEADER
EP	EDGE OF PAVING
FDNAIL	FOUND NAIL WORK POINT
FF	FINISH FLOOR
FG	FINISH GRADE
FL	INVERT OR FLOW LINE ELEVATION
HYD	HYDRANT
HDPE	HIGH DENSITY POLYETHYLENE PIPE
LF	LINEAL FOOT
LP	LIGHT POLE
MH	MANHOLE
N&SWP	NAIL & SHINER SURVEY WORK POINT
PSDE	PRIVATE STORM DRAIN EASEMENT
PVC	PLASTIC STORM PIPE
RCP	REINFORCED CONCRETE DRAIN PIPE
R/W	RIGHT OF WAY
RDWD	REDWOOD
RBRWP	REBAR WORK POINT
RRSPK	RAILROAD SPIKE SURVEY MONUMENT
SANMH	SANITARY MANHOLE
SBL	SETBACK LINE
SETMAGNAIL	SET MAGNETIC NAIL WORK POINT
SETRBRWP	SET REBAR WORK POINT
SF	SQUARE FOOTAGE
SSE	SANITARY SEWER EASEMENT
SWI	STORM WATER INLET
TC	TOP OF CONCRETE CURB
TG	TOP OF GRATE
TCSWI	TOP OF CURB @TYPE "A" STORM WATER INLET
TOP	TOP OF BANK OR SLOPE
TOE	TOE OF BANK OR SLOPE
TW	TOP OF WALL
WV	WATER VALVE

575	EXISTING CONTOUR
(620)	PROPOSED CONTOUR
	EXISTING SPOT ELEVATION
(618.9)	PROPOSED FINISH ELEVATION
(620.5)TW	TOP OF WALL ELEVATION
(618.5)BW	BOTTOM OF WALL ELEVATION
(619.12)FF	FINISH FLOOR ELEVATION
(618.9)	PROPOSED FINISH ELEVATION
(619.12)FS	FINISH SLAB ELEVATION
(619.0)FG	FINISH GRADE
®	TREE TO BE REMOVED
	EXISTING STORM DRAIN
	PROPOSED STORM DRAIN
	PROPOSED SUB DRAIN
25'SBL	SET BACK LINE

DETAIL CIRCLE

D
C3.0

DETAIL NUMBER

SHEET NUMBER

SAINT MARY'S COLLEGE of CALIFORNIA
1928 ST. MARY'S ROAD, MORAGA, CA 94556
FACILITIES SERVICES
P.O. BOX 4747, MORAGA, CA 94575–4747
PHONE (925) 631-4286 FAX (925) 247-0937

SCHELL AND MARTIN, INC.
LAND SURVEYING AND CIVIL ENGINEERING
3377 MT. DIABLO BOULEVARD
LAFAYETTE, CALIFORNIA 925 283-8111

REGISTERED PROFESSIONAL ENGINEER
HOWARD G. MARTIN
No. 54357
EXP. 12-31-11
CIVIL
STATE OF CALIFORNIA

PROJECT TITLE:

SAINT MARY'S COLLEGE MULTI-USE FIELD UPGRADE

DRAWN BY: HGM
CHECKED BY:
PROJECT NO. 408-11

DATE	ISSUE

GENERAL NOTES, VICINITY MAP, SHEET INDEX, ABBREVIATIONS, LEGEND

Issue: GRADING PERMIT

Date: 24 FEBRUARY 2011

Scale: AS NOTED

Drawing No.

C0.0

C:\1 D DRIVE\JOBS\2011\408-11\MULTI USE FIELD HILLSIDE GRADING PLAN 7 FEB 2011.dwg, 2/25/2011 1:56:32 PM

SAINT MARY'S COLLEGE of CALIFORNIA
1928 ST. MARY'S ROAD, MORAGA, CA 94556
FACILITIES SERVICES
P.O. BOX 4747, MORAGA, CA 94575-4747
PHONE (925) 631-4286 FAX (925) 247-0937

SCHELL AND MARTIN, INC.
LAND SURVEYING AND CIVIL ENGINEERING
3377 MT. DIABLO BOULEVARD
LAFAYETTE, CALIFORNIA 925 283-8111

LICENSED LAND SURVEYOR
HOWARD G. MARTIN
EXP. 6-30-12
No. 6690
STATE OF CALIFORNIA

PROJECT TITLE:

SAINT MARY'S COLLEGE MULTI-USE FIELD UPGRADE

DRAWN BY: HGM
CHECKED BY:
PROJECT NO. 408-11

DATE	ISSUE
REV.: FENCE LINE	4 MAR11

EXISTING SITE TOPOGRAPHY

Issue: GRADING PERMIT
Date: 18 FEBRUARY 2011
Scale: AS NOTED
Drawing No.

C1.0

C:\1 D DRIVE\JOBS\2011\408-11\MULTI USE FIELD BASE TOPO 20 FEB 2011.dwg, 3/4/2011 1:24:36 PM

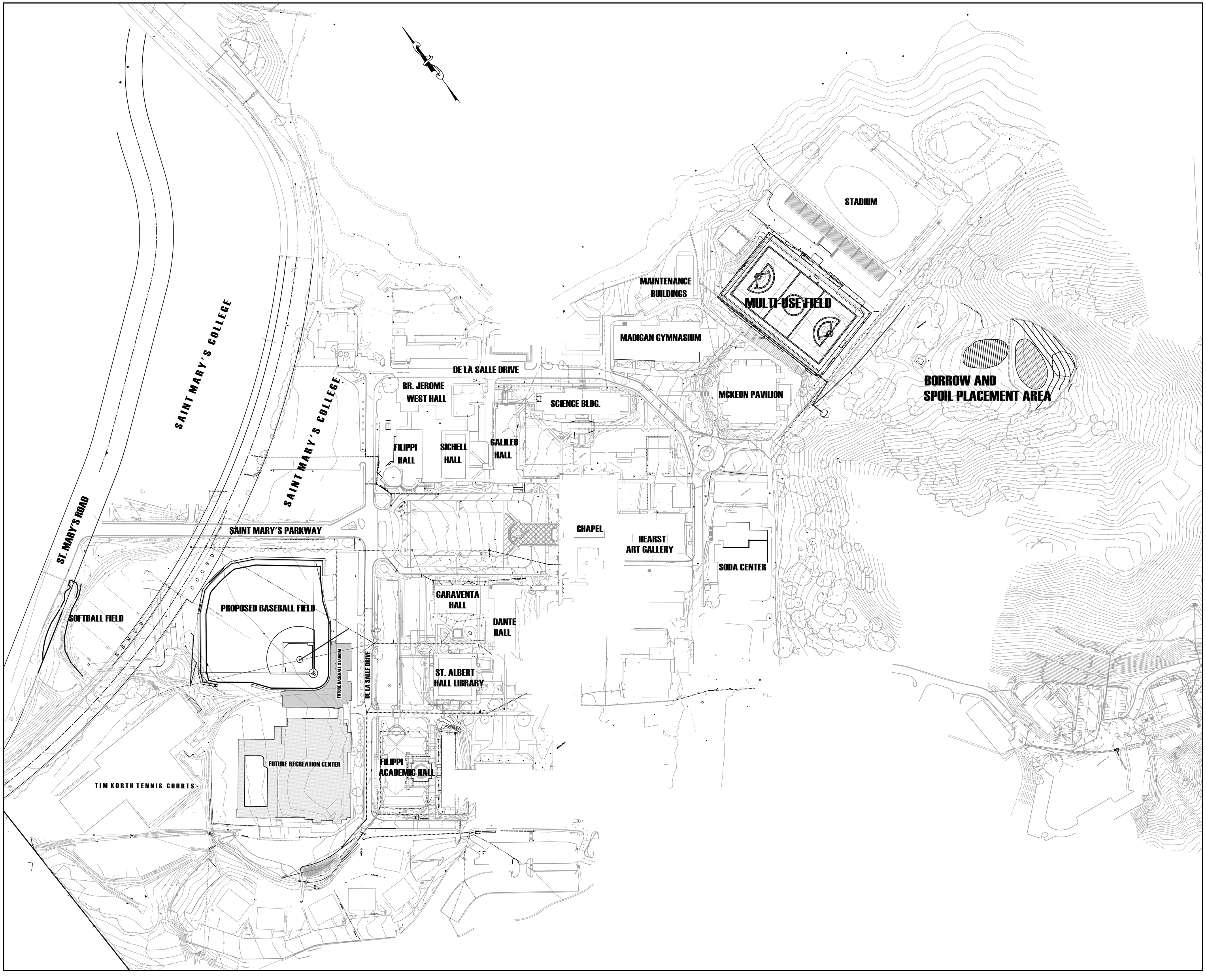

SAINT MARY'S COLLEGE of CALIFORNIA
1928 ST. MARY'S ROAD, MORAGA, CA 94556
FACILITIES SERVICES
P.O. BOX 4747, MORAGA, CA 94575-4747
PHONE (925) 631-4286 FAX (925) 247-0837

SCHELL AND MARTIN, INC.
LAND SURVEYING AND CIVIL ENGINEERING
3377 MT. DIABLO BOULEVARD
LAFAYETTE, CALIFORNIA 925 283-8111

REGISTERED PROFESSIONAL ENGINEER
HOWARD G. MARTIN
No. 54357
EXP. 12-31-11
CIVIL
STATE OF CALIFORNIA

PROJECT TITLE:

SAINT MARY'S COLLEGE MULTI-USE FIELD UPGRADE

DRAWN BY: HGM
CHECKED BY:
PROJECT NO. 443-10

DATE	ISSUE

SITE CONTEXT MAP

Issue: GRADING PERMIT

Date: 24 FEBRUARY 2011

Scale: AS NOTED

Drawing No.

C2.0

C:\1 D DRIVE\JOBS\2011\408-11\MULTI USE FIELD HILLSIDE GRADING PLAN 7 FEB 2011.dwg, 2/25/2011 1:53:13 PM

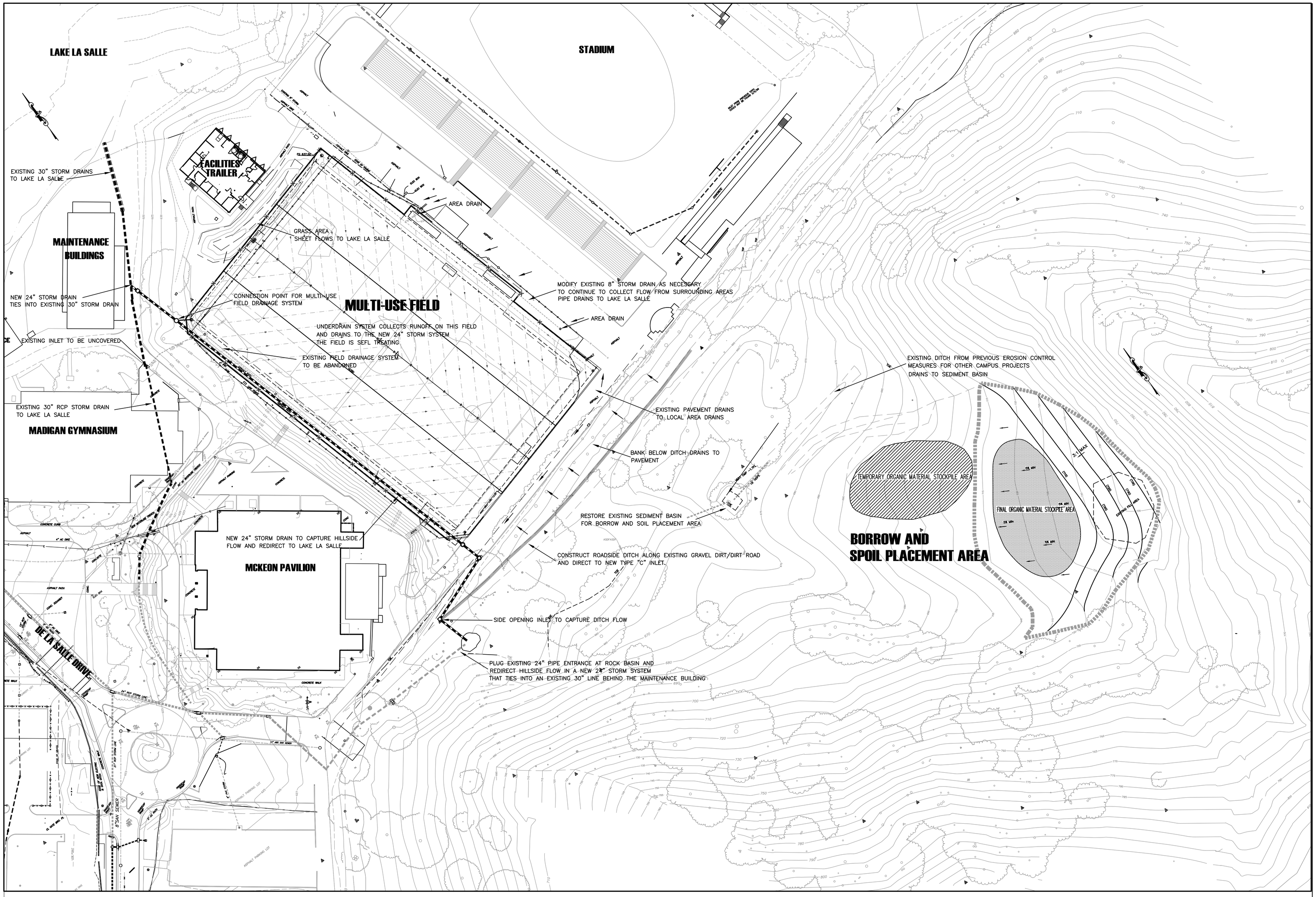

SAINT MARY'S COLLEGE of CALIFORNIA
1928 ST. MARY'S ROAD, MORAGA, CA 94556
FACILITIES SERVICES
P.O. BOX 4747, MORAGA, CA 94575-4747
PHONE (925) 631-4286 FAX (925) 247-0837

SCHELL AND MARTIN, INC.
LAND SURVEYING AND CIVIL ENGINEERING
3377 MT. DIABLO BOULEVARD
LAFAYETTE, CALIFORNIA 925 283-8111

REGISTERED PROFESSIONAL ENGINEER
HOWARD G. MARTIN
No. 54357
EXP. 12-31-11
CIVIL
STATE OF CALIFORNIA

PROJECT TITLE:

SAINT MARY'S COLLEGE MULTI-USE FIELD UPGRADE

DRAWN BY: HGM
CHECKED BY:
PROJECT NO. 443-10

DATE	ISSUE

STORM WATER MANAGEMENT PLAN

Issue: DESIGN REVIEW
Date: 4 FEBRUARY 2011
Scale: AS NOTED
Drawing No.

C3.0

C:\1 D DRIVE\JOBS2011\408-11\MULTI USE FIELD HILLSIDE GRADING PLAN 7 FEB 2011.dwg, 2/25/2011 1:49:40 PM

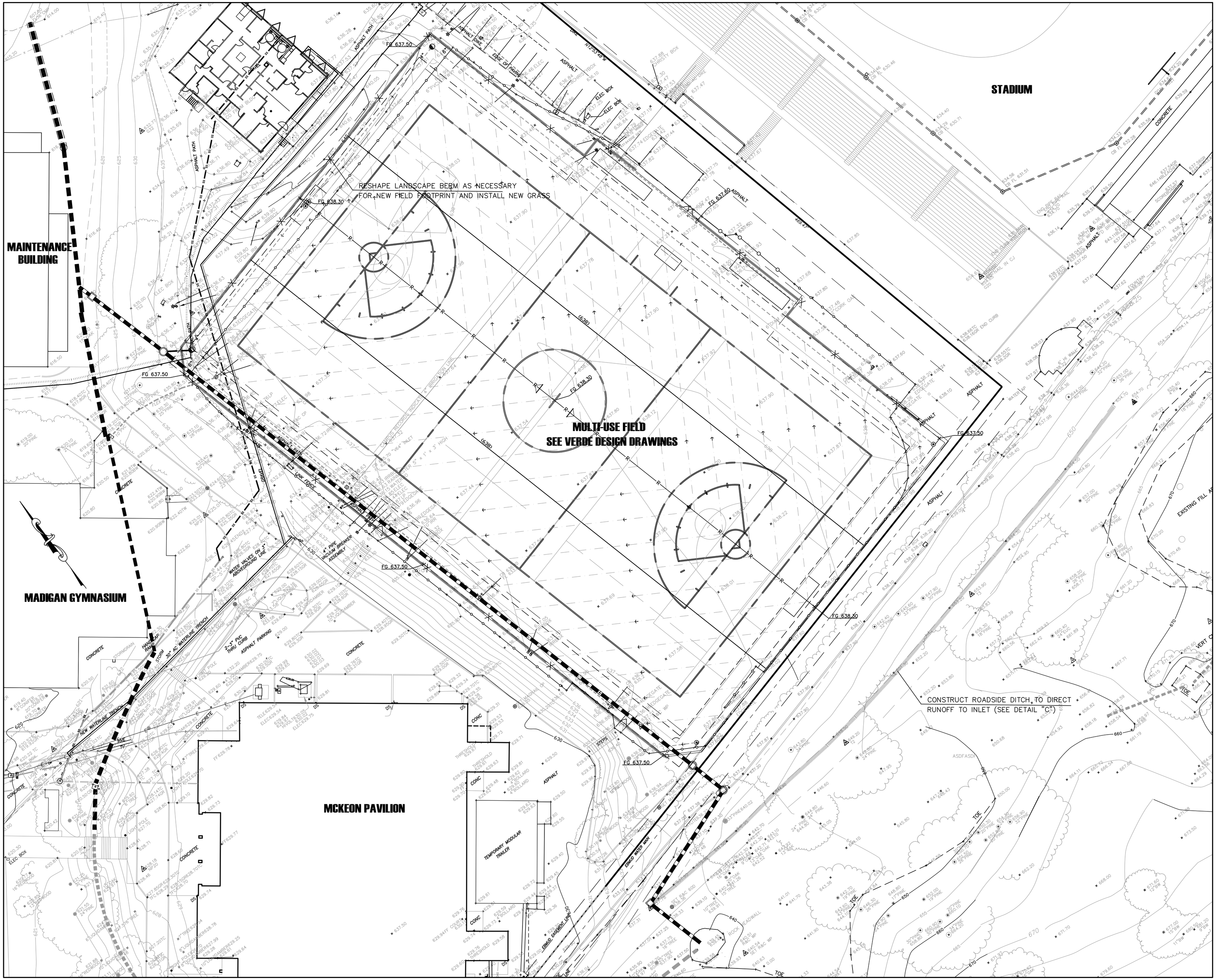

SAINT MARY'S COLLEGE of CALIFORNIA
1928 ST. MARY'S ROAD, MORAGA, CA 94556
FACILITIES SERVICES
P.O. BOX 4747, MORAGA, CA 94575-4747
PHONE (925) 631-4286 FAX (925) 247-0937

SCHELL AND MARTIN, INC.
LAND SURVEYING AND CIVIL ENGINEERING
3377 MT. DIABLO BOULEVARD
LAFAYETTE, CALIFORNIA 925 283-8111

REGISTERED PROFESSIONAL ENGINEER
HOWARD G. MARTIN
No. 54357
EXP. 12-31-11
CIVIL
STATE OF CALIFORNIA

PROJECT TITLE:

SAINT MARY'S COLLEGE MULTI-USE FIELD UPGRADE

DRAWN BY: HGM
CHECKED BY:
PROJECT NO. 443-10

DATE	ISSUE

GRADING AND DRAINAGE PLAN

Issue: GRADING PERMIT
Date: 24 FEBRUARY 2011
Scale: AS NOTED
Drawing No.

C4.0

C:\1 D DRIVE\JOBS2011\408-11\MULTI USE FIELD HILLSIDE GRADING PLAN 7 FEB 2011.dwg, 2/25/2011 1:48:30 PM

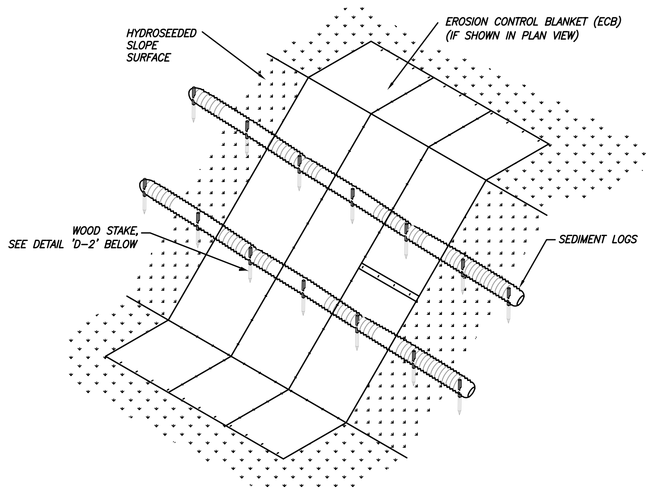

A — STRAW ROLL SLOPE PROTECTION & EROSION CONTROL BLANKET

NOT TO SCALE

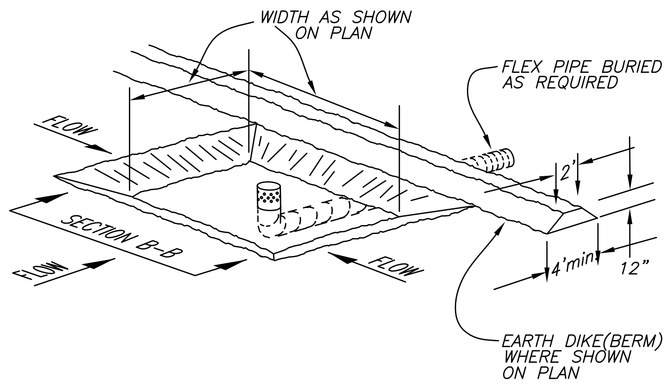

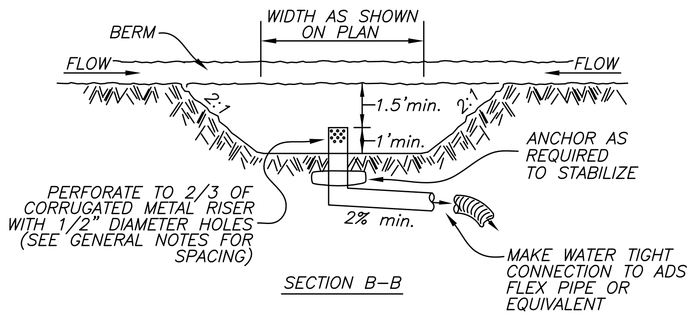

E — STORM DRAIN SEDIMENT TRAP

NOT TO SCALE

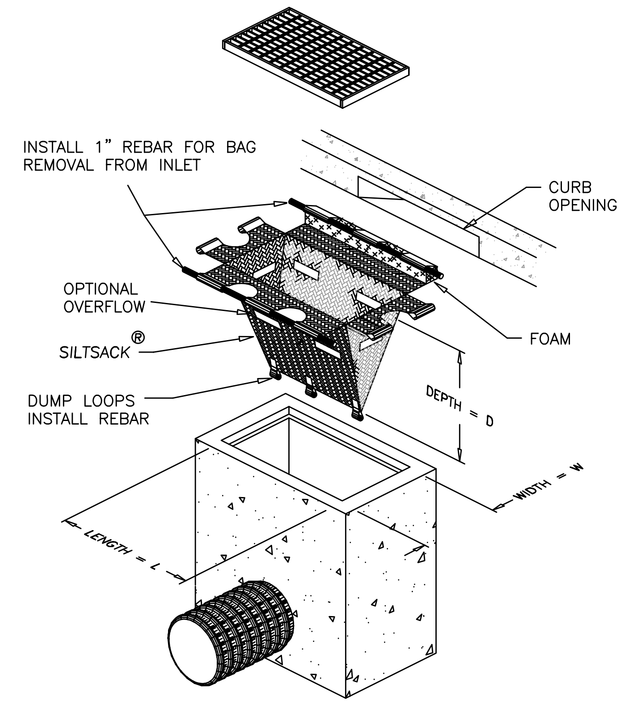

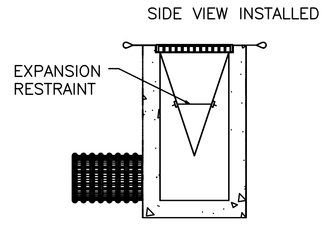

INSTALLATION DETAIL

G — INLET SEDIMENT CONTROL DEVICE WITH CURB DEFLECTOR "SILT SACK"

NOT TO SCALE

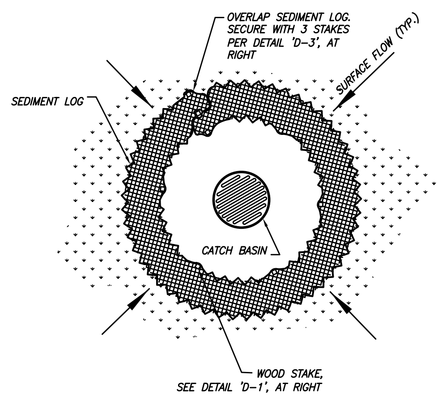

B — STRAW ROLL AT FIELD INLET

NOT TO SCALE

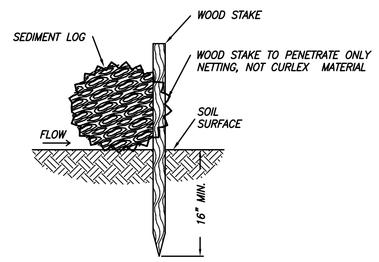

STAKE DETAIL — 1
NO SCALE

1 1/2" X 1 1/2" X 30" WOODEN STAKES ARE RECOMMENDED FOR 6", 9", AND 12" SEDIMENT LOGS.
1" X 1" X 48" WOODEN STAKES ARE RECOMMENDED FOR 20" SEDIMENT LOGS.

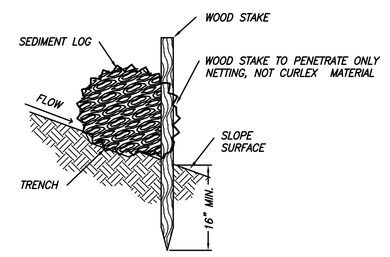

STAKE DETAIL FOR HILLSIDE USE — 2
NO SCALE

NOTE: TRENCH OPTION IS MOST APPLICABLE IN LOOSE, UNCONSOLIDATED SOILS.

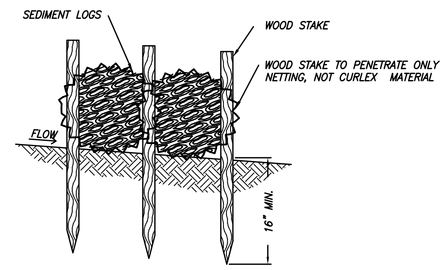

STAKE DETAIL (OVERLAPPING ENDS) — 3
NO SCALE

D — STRAW ROLL STAKING

NOT TO SCALE

THE TERMS "STRAW LOGS", "STRAW ROLLS", "STRAW WATTLES" & "SEDIMENT LOGS" ARE USED INTERCHANGEABLY

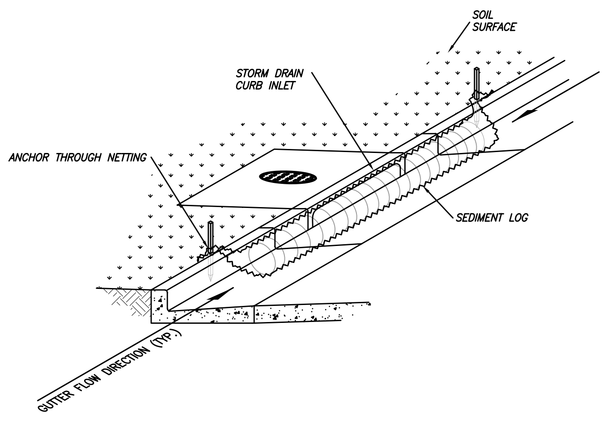

C — STRAW ROLL AT CURB INLET

NOT TO SCALE

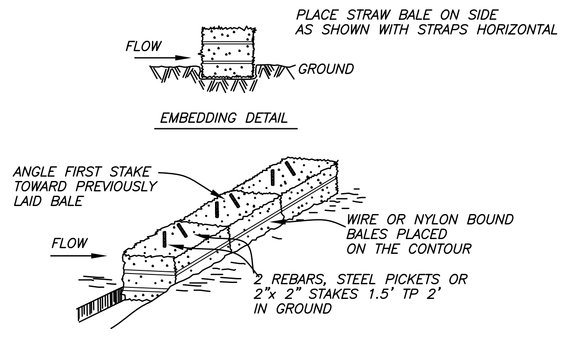

F — ANCHORING DETAIL STRAW BALE DIKE

NOT TO SCALE

DUST & EROSION NOTES

TEMPORARY EROSION CONTROL MEASURES EFFECTIVE DURING RAINY SEASON OCTOBER 1 TO APRIL 15

1. TEMPORARY EROSION CONTROL DEVICES SHOWN ON THIS PLAN, WHICH INTERFERE WITH THE WORK SHALL BE RELOCATED OR MODIFIED WHEN THE INSPECTOR SO DIRECTS, AS THE WORK PROGRESSES.
2. EXCEPT AS OTHERWISE DIRECTED BY THE INSPECTOR, ALL DEVICES SHOWN ON THE EROSION CONTROL PLAN SHALL BE IN PLACE AT THE END OF EACH WORKING DAY. ALL EROSION CONTROL FACILITIES MUST BE INSPECTED AND REPAIRED AT THE END OF EACH WORKING DAY DURING THE RAINY SEASON AND MAINTAINED THROUGHOUT THE RAINY SEASON (OCTOBER 1 TO APRIL 15).
3. ALL EROSION AND SEDIMENT CONTROL MEASURES SHALL BE CONSTRUCTED AND MAINTAINED IN ACCORDANCE WITH THE PROVISIONS OF THE ASSOCIATION OF BAY AREA GOVERNMENTS (ABAG) "MANUAL OF STANDARDS FOR EROSION AND SEDIMENT CONTROL MEASURES" UNLESS OTHERWISE STATED WITHIN THESE GENERAL NOTES. CONTROL MEASURES ARE SUBJECT TO THE INSPECTION AND APPROVAL OF THE ENGINEERING DEPARTMENT OF THE TOWN OF MORAGA. SCHEDULE AN ENGINEERING INSPECTION BY CALLING (925) 888-7026 AT LEAST 48 HOURS PRIOR TO THE START OF ANY WORK.
4. ALL LOOSE SOIL AND DEBRIS SHALL BE REMOVED FROM PAVED AREAS UPON STARTING OPERATIONS AND PERIODICALLY THEREAFTER AS DIRECTED BY THE INSPECTOR. THE SITE SHALL BE MAINTAINED SO AS TO MINIMIZE SEDIMENT-LADEN RUNOFF TO ANY STORM DRAIN SYSTEM.
5. THE CONTRACTOR SHALL PLACE DRAIN ROCK AS A GRAVEL ROADWAY (8" MINIMUM THICKNESS, 16 FEET WIDE AND 30 FEET LONG) AT EACH ROAD ENTRANCE TO THE SITE. ANY MUD THAT IS TRACKED ONTO PAVED AREAS SHALL BE REMOVED THE SAME DAY.
6. STAND-BY CREWS SHALL BE ALERTED BY THE PERMITTEE OR CONTRACTOR FOR EMERGENCY WORK DURING RAINSTORMS.
7. AFTER OCTOBER 1, ALL EROSION CONTROL MEASURES WILL BE INSPECTED DAILY AND AFTER EACH STORM. AFTER OCTOBER 1, BREACHES IN DIKES AND SWALES WILL BE REPAIRED AT THE CLOSE OF EACH DAY AND WHENEVER RAIN IS FORECAST.
8. LOCATION OF TEMPORARY CONSTRUCTION ENTRANCE TO BE DETERMINED BY CONTRACTOR. SEE NOTE, THIS SHEET.
9. NOT USED
10. NOT USED.
11. IF ANY GRADING OPERATIONS, OTHER THAN FINISH GRADING, ARE TO BE PERFORMED DURING THE RAINY SEASON, OCTOBER 1 THROUGH APRIL 15, AN UPDATED EROSION CONTROL PLAN MUST BE SUBMITTED BY SEPTEMBER 1 AND THE PLAN MUST BE APPROVED BY THE TOWN OF MORAGA PRIOR TO THE COMMENCEMENT OF ANY SUCH GRADING OPERATIONS.
12. TO MINIMIZE EROSION OF GRADED BANKS, ALL GRADED BANKS HIGHER THAN 3 FEET SHALL BE HYDROSEEDED, LANDSCAPED, OR SEALED. IN ADDITION TO HYDROSEEDING, APPLICATION OF STRAW WITH A TACKIFIER OR MULCH MAY BE REQUIRED BY THE CITY ENGINEER. IF THE PERMANENT STORM DRAIN SYSTEM IS NOT INSTALLED BY OCTOBER 1, TEMPORARY DITCHES SHALL BE CONSTRUCTED TO CONTAIN THE STORM WATER AND DIRECT IT, IN A MANNER THAT AVOIDS EROSION OF THE BANKS, TO THE EROSION AND SEDIMENT CONTROL FACILITIES. EROSION CONTROL BLANKETS MAY BE SUBSTITUTED FOR HYDROSEEDING.
13. HYDROSEEDED SLOPES SHALL BE IRRIGATED SO THAT GRASS GROWS BEFORE OCTOBER 1st.
14. HYDROSEEDING SHALL BE PER ABAG'S "MANUAL OF STANDARDS FOR EROSION AND SEDIMENT CONTROL MEASURES". SUGGESTED MIX IS AS FOLLOWS:

'BLANDO' BROME	40 LBS/ACRE
ZORRO FESCUE	10 LBS/ACRE
HYKON ROSE CLOVER	9 LBS/ACRE
SUB CLOVER	5 LBS/ACRE
CALIFORNIA NATIVE WILDFLOWER	8 LBS/ACRE
FERTILIZER	300 LBS/ACRE
ORGANIC BINDER	100 LBS/ACRE
STRAW MULCH	4000 LBS/ACRE

15. BORROW AREAS AND TEMPORARY STOCKPILES SHALL BE PROTECTED WITH APPROPRIATE EROSION CONTROL MEASURES TO THE SATISFACTION OF THE CITY ENGINEER.
16. SANDBAGS, STRAW WATTLES AND/OR STRAW BALES SHALL BE STOCKPILED ON SITE AND PLACED AT THE REQUIRED INTERVALS PER THESE NOTES, OR AS SHOWN ON THE EROSION CONTROL PLANS, WHEN THE RAIN FORECAST IS 40 % OR GREATER, OR WHEN DIRECTED BY THE INSPECTOR.
17. SANDBAGS REFERRED TO IN THE PRECEDING ITEMS MUST BE FULL. APPROVED SANDBAG FILL MATERIALS ARE DECOMPOSED GRANITE AND/OR GRAVEL, OR OTHER MATERIALS APPROVED BY THE INSPECTOR.
18. WHEN DIRECTED BY THE INSPECTOR, A 12-INCH BERM SHALL BE MAINTAINED ALONG THE TOP OF THE SLOPE OF THOSE CUTS OR FILLS ON WHICH GRADING IS NOT IN PROGRESS.
19. WHERE BANK HEIGHT EXCEEDS 6 FEET, A MINIMUM 12" BERM SHALL BE MAINTAINED ALONG THE TOP OF BANK, AND THE BERM SHALL DIRECT THE WATER TO THE OUTLET. STRAW LOGS (STRAW ROLLS, STRAW WATTLES, SEDIMENT LOGS) MAY BE USED INSTEAD OF EARTH BERMS. VELOCITY CHECK DAMS SHALL BE INSTALLED BETWEEN THE OUTLET AND THE PAVED AREA.
20. PROVIDE VELOCITY CHECK DAMS IN THE UNPAVED DRIVEWAYS AT THE INTERVALS INDICATED BELOW IN NOTE #21. VELOCITY CHECK DAMS MAY BE CONSTRUCTED OF STRAW BALES, SANDBAGS OR OTHER EROSION RESISTANT MATERIALS APPROVED BY THE INSPECTOR, AND SHALL EXTEND COMPLETELY ACROSS THE STREET OR CHANNEL AT RIGHT ANGLES TO THE CENTERLINE. EARTH DIKES MAY NOT BE USED AS VELOCITY CHECK DAMS.
21. PROVIDE VELOCITY CHECK DAMS IN ALL UNPAVED GRADED ROADS AND DRIVEWAYS AT THE INTERVALS INDICATED BELOW:

GRADE OF CHANNEL	INTERVAL
LESS THAN 3%	100 FEET
3% TO 6%	50 FEET
OVER 6%	25 FEET

22. SEWER OR STORM DRAIN TRENCHES THAT ARE CUT THROUGH BASIN DIKES OR BASIN INLET DIKES, SHALL BE PLUGGED WITH SANDBAGS FROM TOP OF PIPE TO TOP OF DIKE. SEWER LINES SHALL FIRST BE ENCASED IN CONCRETE BEFORE SANDBAGS ARE PLACED.
23. ALL OPEN UTILITY TRENCHES SHALL BE BLOCKED AT THE PRESCRIBED INTERVALS FROM THE BOTTOM TO TOP WITH A DOUBLE ROW OF SANDBAGS PENDING BACKFILL. SANDBAGS SHALL BE PLACED WITH ALTERNATE HEADER AND STRETCHER COURSES. THE INTERVALS PRESCRIBED BETWEEN SANDBAG BLOCKING SHALL DEPEND ON THE SLOPE OF THE GROUND SURFACE, BUT NOT EXCEED THE FOLLOWING:

GRADE OF TRENCH	INTERVAL
LESS THAN 2%	AS REQUIRED
2% TO 4%	100 FEET
4% TO 10%	50 FEET
OVER 10%	25 FEET

24. AFTER STORM DRAIN, SANITARY SEWER AND UTILITY TRENCHES ARE BACKFILLED AND COMPACTED, THE SURFACES OVER SUCH TRENCHES SHALL BE MOUNDED SLIGHTLY TO PREVENT CHANNELING OF WATER IN THE TRENCH AREA. CARE SHOULD BE EXERCISED TO PROVIDE FOR CROSS FLOW AT FREQUENT INTERVALS.

CONSTRUCTION ENTRANCE NOTES

1. A STABILIZED CONSTRUCTION ENTRANCE SHALL BE USED AT ALL POINTS OF CONSTRUCTION INGRESS AND EGRESS.
2. THE AGGREGATE SHALL BE 2"-3" CRUSHED ROCK, 8"MIN. THICKNESS.
3. THE ENTRANCE SHALL BE PROPERLY GRADED TO PREVENT RUNOFF FROM LEAVING THE CONSTRUCTION SITE.
4. PERIODIC TOP DRESSING WITH ADDITIONAL STONE SHALL BE PROVIDED TO ENSURE THE INTEGRITY OF THE ENTRANCE.
5. CONTRACTOR TO MAINTAIN ENTRANCE AT ALL TIMES.
6. ALL SEDIMENT DEPOSITS ON PAVED SURFACES SHALL BE REMOVED WITHIN 24 HOURS.
7. THE ROCK SHALL BE REMOVED AT COMPLETION OF CONSTRUCTION.

SAINT MARY'S COLLEGE of CALIFORNIA
1928 ST. MARY'S ROAD, MORAGA, CA 94556
FACILITIES SERVICES
P.O. BOX 4747, MORAGA, CA 94575-4747
PHONE (925) 631-4286 FAX (925) 247-0837

SCHELL AND MARTIN, INC.
LAND SURVEYING AND CIVIL ENGINEERING
3377 MT. DIABLO BOULEVARD
LAFAYETTE, CALIFORNIA 925 283-8111

REGISTERED PROFESSIONAL ENGINEER — RICHARD G. MARTIN — No. 54357 — EXP. 12-31-11 — CIVIL — STATE OF CALIFORNIA

PROJECT TITLE:

SAINT MARY'S COLLEGE PROPOSED MULTI-USE FIELD

DRAWN BY: HGM
CHECKED BY:
PROJECT NO. 408-11

DATE	ISSUE

EROSION AND SEDIMENTATION NOTES AND DETAILS

Issue: GRADING PERMIT
Date: 24 FEBRUARY 2011
Scale: NONE
Drawing No.

C5.2

X:\JOBS 2011\408-11 SMC Multi-Use Field\Multi Use Erosion Control Plan 18Feb11.dwg, 2/20/2011 12:05:53 PM

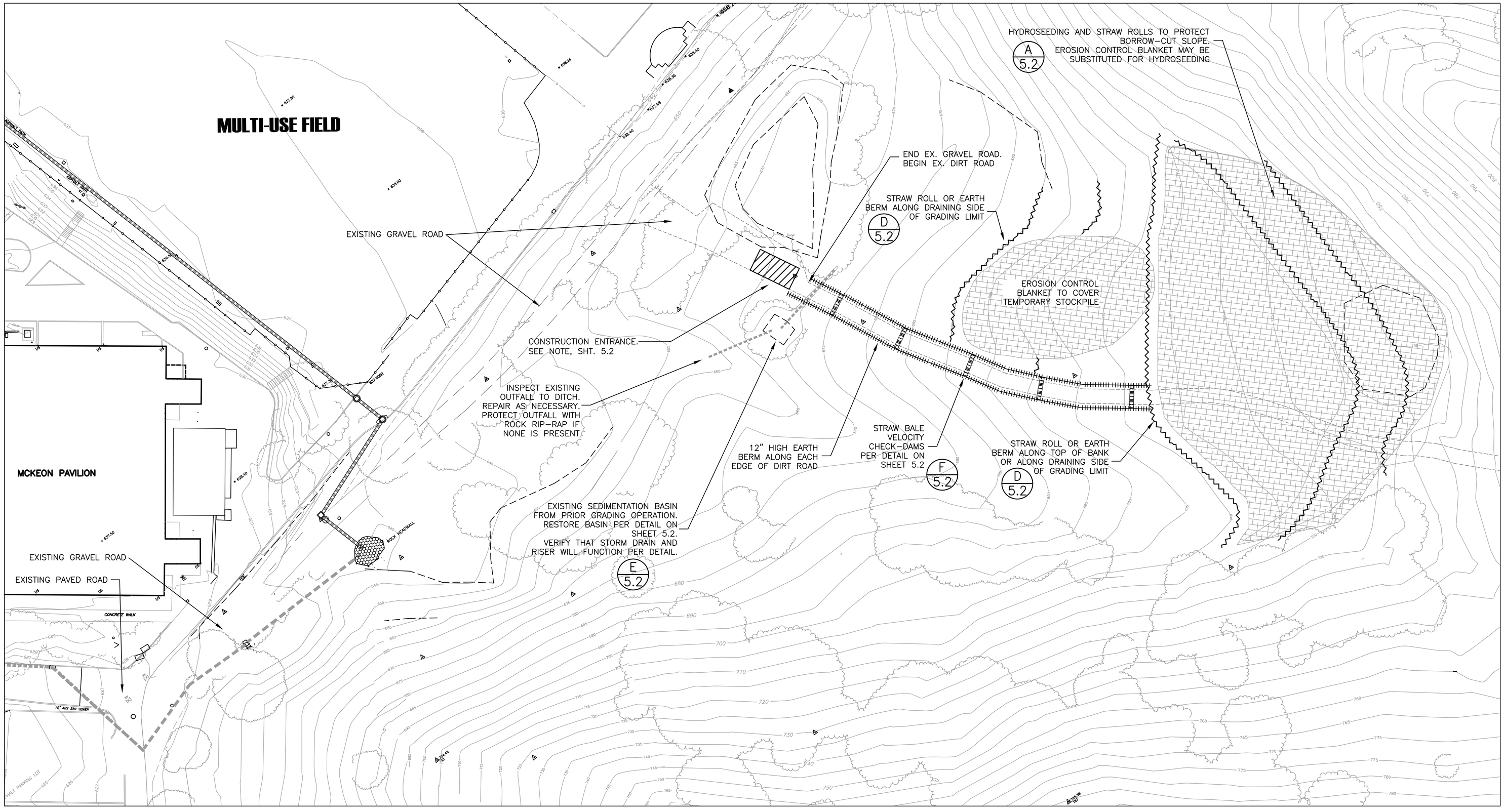

SCALE: 1" = 30'

EROSION CONTROL LEGEND

STRAW WATTLE PLACED PER DETAIL

12" HIGH EARTH BERM

HYDROSEEDING OR
EROSION CONTROL BLANKET OVER EXPOSED SOIL

N

0 30 60 90

SAINT MARY'S COLLEGE of CALIFORNIA
1928 ST. MARY'S ROAD, MORAGA, CA 94556
FACILITIES SERVICES
P.O. BOX 4747, MORAGA, CA 94575-4747
PHONE (925) 631-4208 FAX (925) 247-0207

SCHELL AND MARTIN, INC.
LAND SURVEYING AND CIVIL ENGINEERING
3377 MT. DIABLO BOULEVARD
LAFAYETTE, CALIFORNIA 925 283-8111

REGISTERED PROFESSIONAL ENGINEER
HOWARD G. MARTIN
No. 54357
EXP. 12-31-11
CIVIL
STATE OF CALIFORNIA

CONSULTANTS:

PROJECT TITLE:

SAINT MARY'S COLLEGE PROPOSED MULTI-USE FIELD

DRAWN BY: HGM
CHECKED BY:
PROJECT NO. 408-11

DATE	ISSUE

EROSION AND SEDIMENTATION CONTROL PLAN

Issue: GRADING PERMIT

Date: 24 FEBRUARY 2011

Scale:

Drawing No.

C5.1

X:\JOBS 2011\408-11 SMC Multi-Use Field\Multi Use Erosion Control Plan 18Feb11.dwg, 2/20/2011 12:05:06 PM

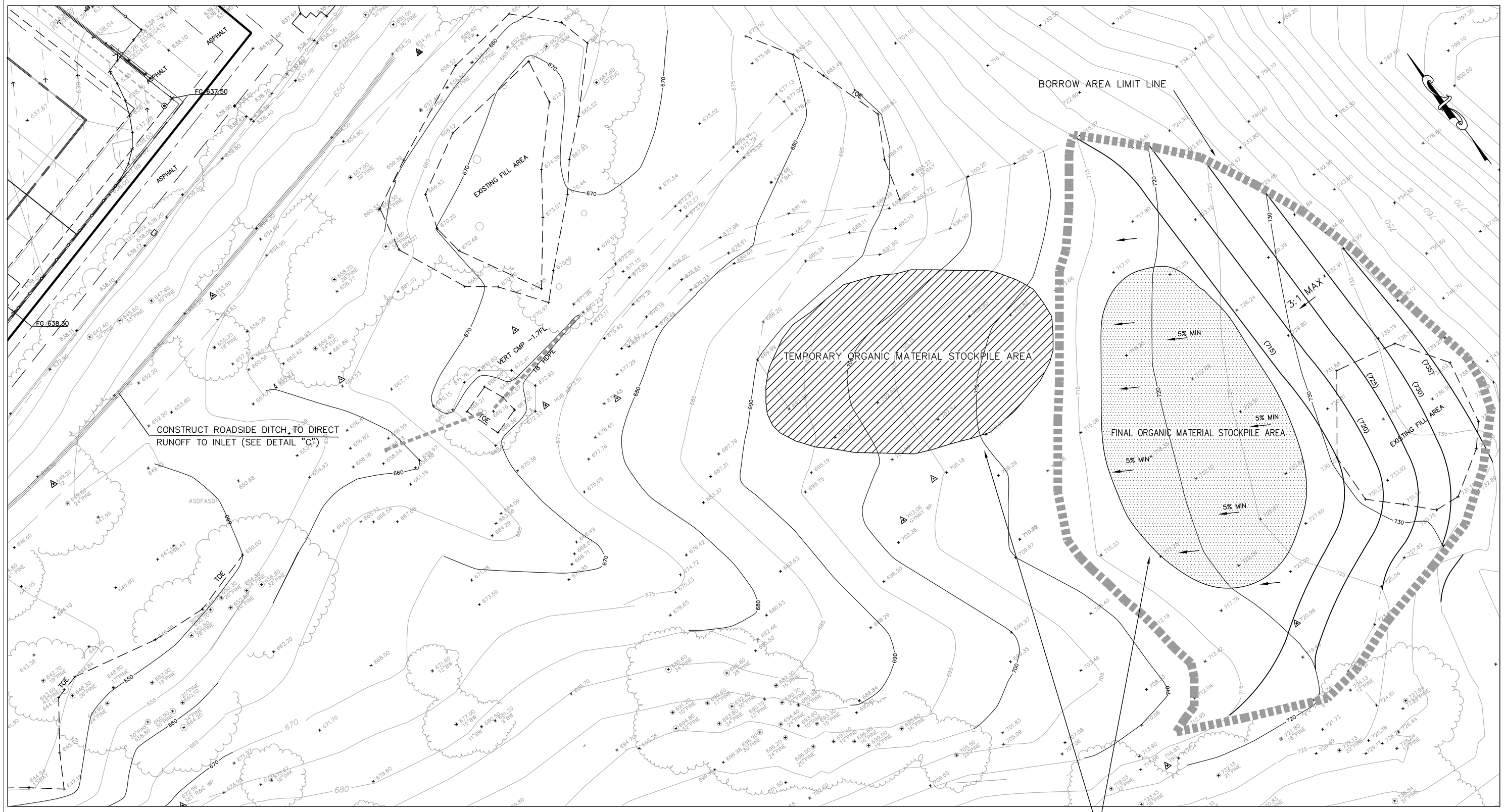

GRADING NOTES

1. ALL GRADING, SITE PREPARATION, PLACING AND COMPACTION OF FILL TO BE DONE IN ACCORDANCE WITH CONTRA COSTA COUNTY GRADING ORDINANCE NO. 69–59 AND ALSO UNDER THE DIRECT SUPERVISION OF THE SOILS ENGINEER, AND INSPECTED BY THE GRADING SECTION. SUBSEQUENT TO COMPLETION OF WORK THE SOILS ENGINEER SHALL SUBMIT TO THE COUNTY BUILDING DEPARTMENT A REPORT STATING THAT ALL WORK HAS BEEN DONE TO HIS SATISFACTION.

2. ANY DEVIATION FROM APPROVED PLANS WILL REQUIRE APPROVAL OF THE CONTRA COSTA COUNTY GRADING ENGINEER.

3. CONTRACTOR TO NOTIFY CONTRA COSTA COUNTY GRADING SECTION 48 HOURS PRIOR TO THE START OF WORK.

4. ALL CUT SLOPES SHALL BE ROUNDED TO MEET EXISTING GRADES AND BLEND WITH SURROUNDING TOPOGRAPHY. ALL GRADED SLOPES SHALL BE PLANTED WITH SUITABLE GROUND COVER.

5. DURING GRADING OPERATIONS THE CONTRACTOR SHALL WET DOWN GRADING AREAS AND ANY HAUL ROUTES USED BY TRUCKS AND OTHER HEAVY EQUIPMENT AT LEAST TWICE DAILY TO REDUCE AIRBORNE DUST. IN ADDITION, THE NOISE LEVEL AT THE CONTRACTOR'S OPERATION SHALL BE KEPT TO A MINIMUM AS PER TOWN OF MORAGA SPECIFICATIONS.

6. THE CONTRACTOR SHALL NOTIFY UNDERGROUND SERVICE ALERT (USA) 48 HOURS PRIOR TO ANY EXCAVATION. PHONE (800) 642–2444.

7. SILT AND EROSION CONTROL PLANS REQUIRED DURING RAINY SEASON (OCTOBER 1 THROUGH APRIL 15). PLANS WILL BE REQUIRED IF WORK INCLUDING LANDSCAPING, WILL NOT BE COMPLETED PRIOR TO OCTOBER 15.

8. THE SOILS REPORT ENTITLED
, PROJECT NO. , DATED
BY JENSEN VAN–LIENDEN ASSOCIATES SHALL BE MADE A PART OF THESE PLANS.

9. THE CONTRACTOR SHALL BE RESPONSIBLE TO KEEP ALL PUBLIC RIGHT–OF–WAY AND OFF–SITE AREAS CLEAN FROM ALL DIRT, MUD, DUST AND DEBRIS AT ALL TIMES. ANY OFF–SITE DAMAGE TO A TOWN STREET, WHICH IS FOUND BY THE TOWN ENGINEER TO BE THE RESULT OF THE GRADING OPERATION, SHALL BE CORRECTED BY THE APPLICANT CONTRACTOR.

10. IF HUMAN SKELETAL REMAINS ARE ENCOUNTERED DURING CONSTRUCTION, ALL WORK WITHIN 20 METERS OF THE DISCOVERY SHALL BE STOPPED IMMEDIATELY AND THE COUNTY CORONER NOTIFIED. IF THE REMAINS ARE NATIVE AMERICAN, THE CORONER HAS 24 HOURS TO NOTIFY THE NATIVE AMERICAN HERITAGE COMMISSION. IF ANY BURIED CULTURAL REMAINS ARE ENCOUNTERED DURING CONSTRUCTION, ALL WORK WITHIN 20 METERS OF THE DISCOVERY SHALL BE STOPPED UNTIL A PROFESSIONAL ARCHAEOLOGIST IS RETAINED TO DETERMINE THE SIGNIFICANCE OF THE FIND, AND TO RECOMMEND ANY REMEDIAL ACTIONS.

11. CALL SOILS ENGINEER TO INSPECT ALL FILL AND FINISH GRADES.

GRADING SEQUENCE NOTE

CONTRACTOR TO COORDINATE THE GRADING EFFORT BETWEEN THE MULTI–USE FIELD AND THE BASEBALL FIELD. THIS PLAN AND ASSOCIATED EROSION CONTROL PLAN IS INTENDED TO SHOW WHERE SOIL IS TO BE BORROWED FROM AND ORGANIC MATERIALS PLACED. THE IDEAL SEQUANCE OF GRADING WOULD BE TO STRIP BOTH THE MULTI–USE FIELD AND THE BASEBALL FIELD SIMULTANEOUSLY, STOCKPILING THE ORGANIC MATERIAL AWAY FROM THE BORROW SITE, MOVE CUT FROM MULTI–USE FILED TO BASEBALL FIELD, THEN BEGIN THE BORROW FROM THE SITE DESIGNATED ON THIS PLAN.
IF CONDITIONS DO NOT PERMIT THIS SEQUENCE, OR THE MATERIAL UNDER THE MULTI–USE FIELD IS NOT SUITABLE FOR FILL AT THE FRONT FIELD, SPOILS FROM THE MULTI–USE FIELD SHOULD BE PLACED IN THE SHADED AREA AND MOVED BACK INTO THE BORROW AREA WITH DIRECTION FROM THE SOILS ENGINEER. THE ORGANIC MATERIAL SHOULD THEN BE PLACED BACK ONTO THE LEVEL AREA IN PILES TO DECOMPOSE.

STRIP BORROW AREA OF ORGANIC MATERIAL AND PLACE DOWNSLOPE OF GRADING AREA. WHEN NO MORE SOIL IS NEEDED FINISH SLOPE AT EDGE OF 3:1 CUT TO PROVIDE 5% MIN SLOPE POSITIVE DRAINAGE AWAY FROM CUT SLOPE. PUSH ORGANIC MATERIAL BACK INTO LEVELED AREA AND EROSION CONTROL MEASURES AS SPECIFIED.
FINISH CONTOURS ON THIS PLAN SHOW DEPICT A CUT OF 6,900 CUBIC YARDS

GRADING QUANTITIES

BASEBALL FIELD

TURF STRIPPINGS	3,100 CY±
ON–SITE OFF–HAUL TO ON–SITE BORROW AREA –	
FILL	6,600 CY±
ON–SITE FILL FROM BORROW AREA TO SUBGRADE	
IMPORT GRAVEL	2,000 CTY±
IMPORT SAND	5,000 VY±

MULTI–USE FIELD

TURF STRIPPINGS	1,800 CY±
ON–SITE OFF–HAUL TO ON–SITE BORROW AREA –	
CUT	250 CY±
FILL	1,200 CY±
ON–SITE FILL FROM BORROW AREA TO SUBGRADE	
IMPORT GRAVEL	1,200 CTY±

SAINT MARY'S COLLEGE of CALIFORNIA
1928 ST. MARY'S ROAD, MORAGA, CA 94556
FACILITIES SERVICES
P.O. BOX 4747, MORAGA, CA 94575–4747
PHONE (925) 631–4286 FAX (925) 247–0937

SCHELL AND MARTIN, INC.
LAND SURVEYING AND CIVIL ENGINEERING
3377 MT. DIABLO BOULEVARD
LAFAYETTE, CALIFORNIA 925 283-8111

REGISTERED PROFESSIONAL ENGINEER HOWARD G. MARTIN No. 54357 EXP. 12-31-11 CIVIL STATE OF CALIFORNIA

PROJECT TITLE:

SAINT MARY'S COLLEGE MULTI-USE FIELD UPGRADE

DRAWN BY: HGM
CHECKED BY:
PROJECT NO. 443-10

DATE	ISSUE

GRADING PLAN FOR SOIL BORROW AREA

Issue: GRADING PERMIT
Date: 24 FEBRUARY 2011
Scale: AS NOTED
Drawing No.

C5.0

C:\1 D DRIVE\JOBS\2011\#08-11\MULTI USE FIELD HILLSIDE GRADING PLAN 7 FEB 2011.dwg, 2/25/2011 11:50:46 PM

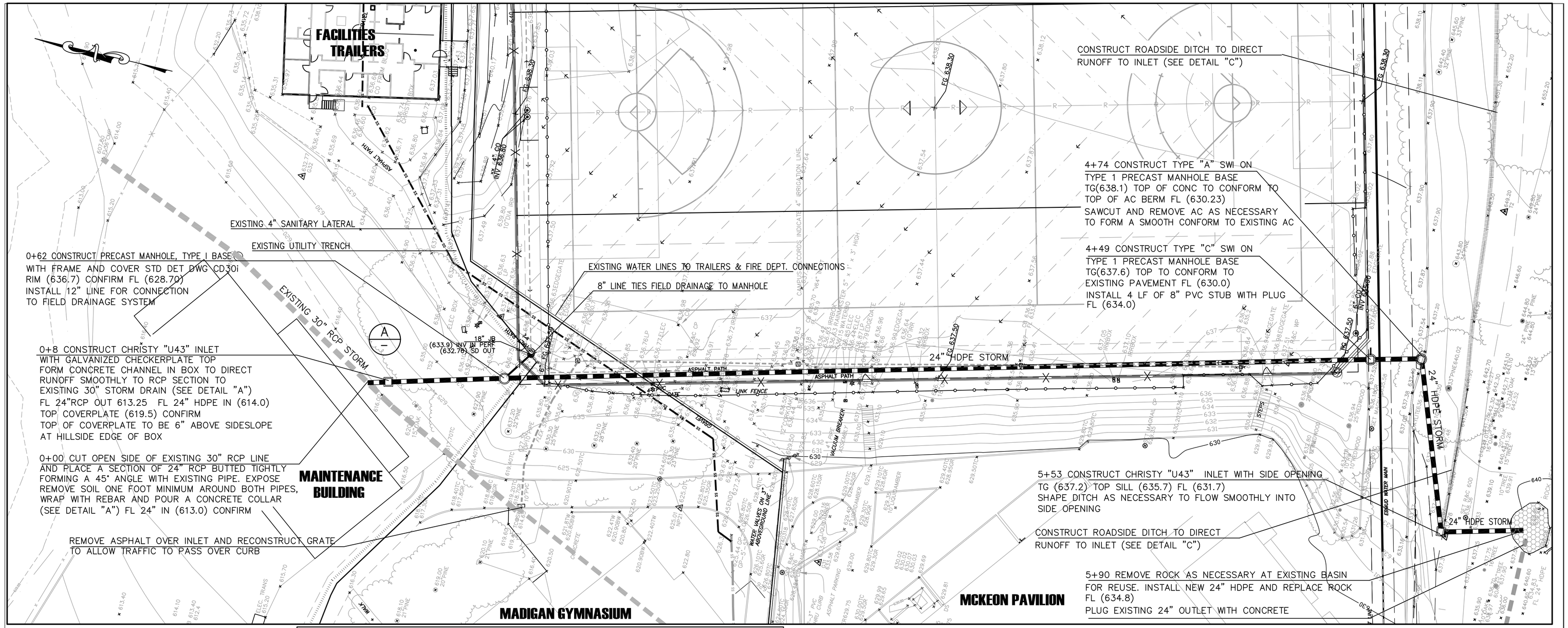

SCALE: 1"=20'

PROFILE SCALE
HORIZONTAL: 1"=20'
VERTICAL: 1"=5'

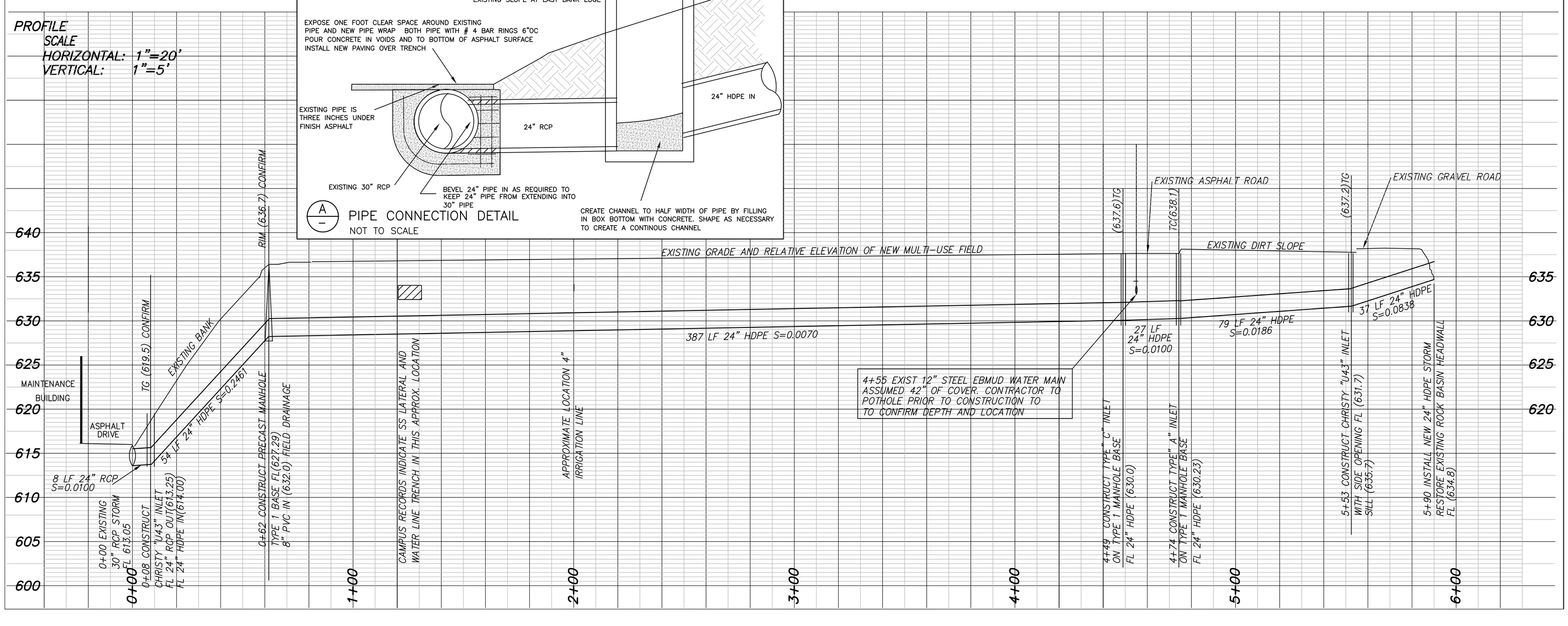

SAINT MARY'S COLLEGE of CALIFORNIA
1928 ST. MARY'S ROAD, MORAGA, CA 94556
FACILITIES SERVICES
P.O. BOX 4747, MORAGA, CA 94575-4747
PHONE (925) 631-4286 FAX (925) 247-0937

REGISTERED PROFESSIONAL ENGINEER HOWARD G. MARTIN No. 54357 EXP. 12-31-11 CIVIL STATE OF CALIFORNIA

SCHELL AND MARTIN, INC.
LAND SURVEYING AND CIVIL ENGINEERING
3377 MT. DIABLO BOULEVARD
LAFAYETTE, CALIFORNIA 925 283-8111

PROJECT TITLE:

SAINT MARY'S COLLEGE MULTI-USE FIELD UPGRADE

DRAWN BY: HGM
CHECKED BY:
PROJECT NO. 443-10

DATE	ISSUE

STORM DRAIN PLAN

Issue: GRADING PERMIT
Date: 24 FEBRUARY 2011
Scale: AS NOTED
Drawing No.

C4.1

C:\1 D DRIVE\JOBS2011\408-11\MULTI USE FIELD HILLSIDE GRADING PLAN 7 FEB 2011.dwg, 2/25/2011 1:47:21 PM