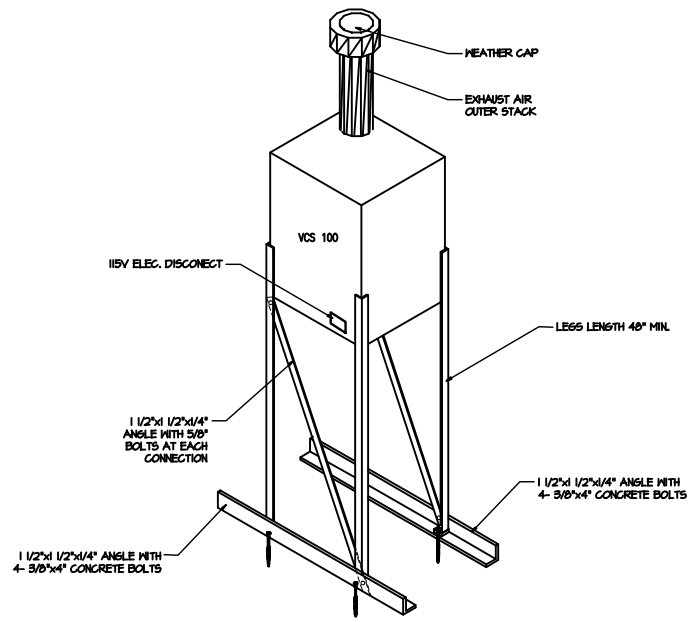

TYPICAL VIEW

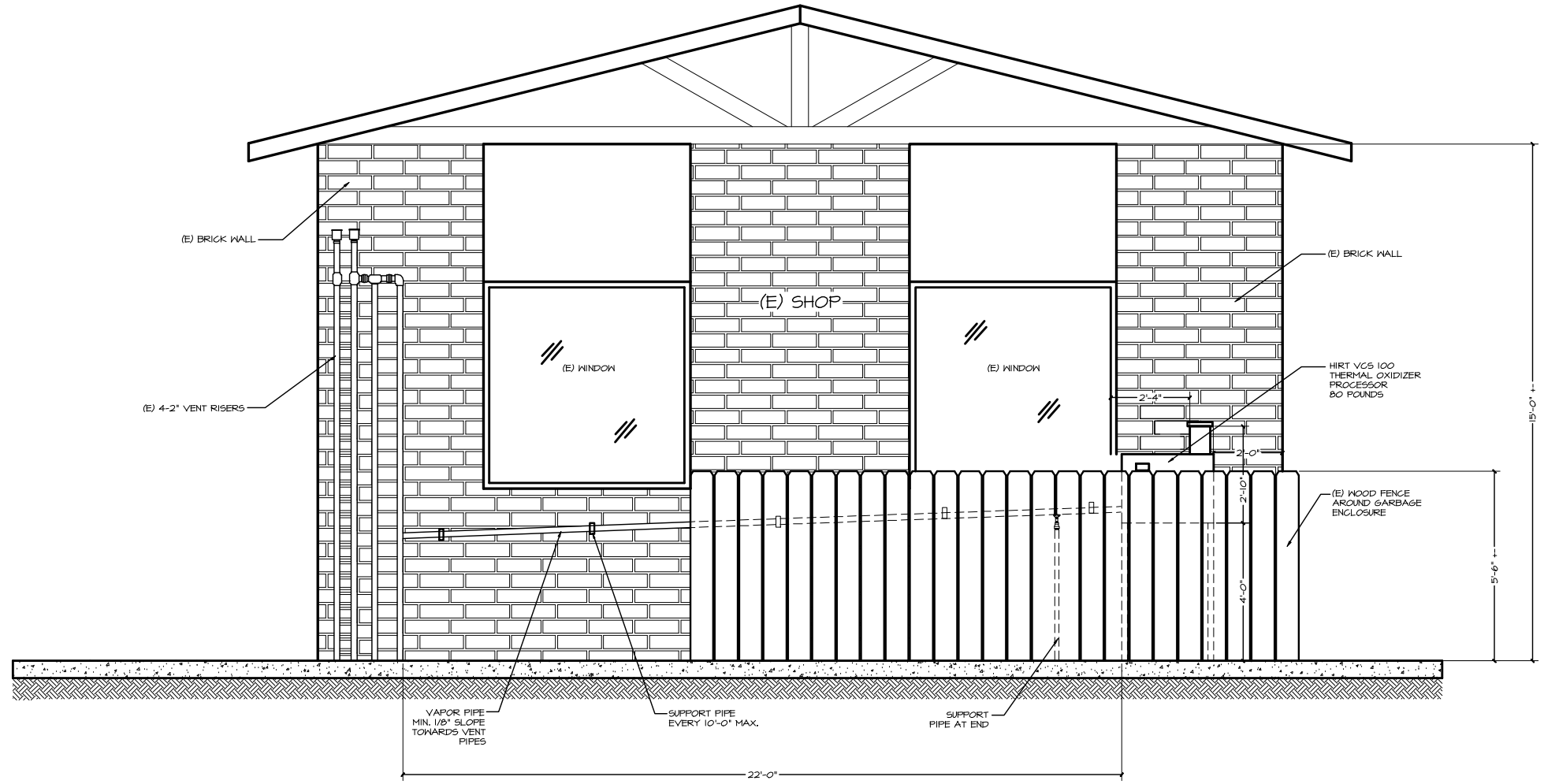

HIRT SYSTEM & VENT RISERS ELEVATION

1/2"=1'-0"

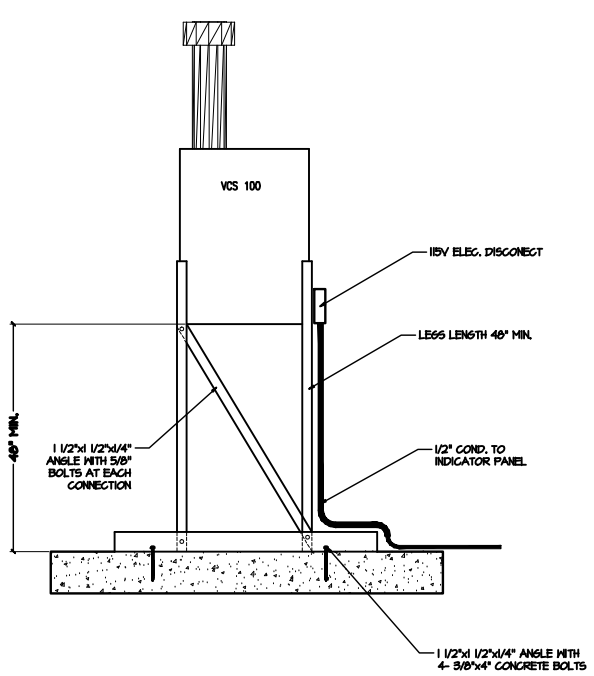

ELEVATION

N.T.S.

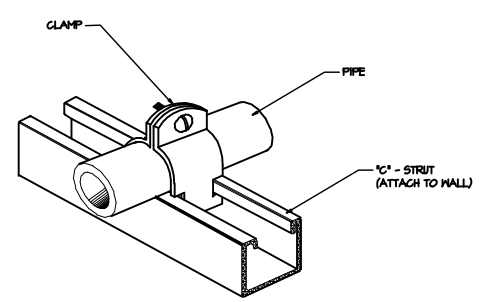

WALL SUPPORT DETAIL

N.T.S.

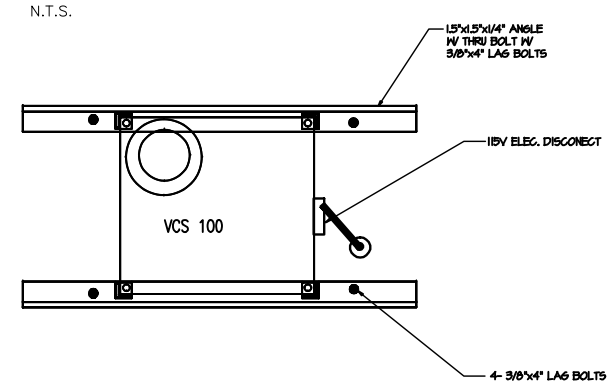

PLAN VIEW

N.T.S.

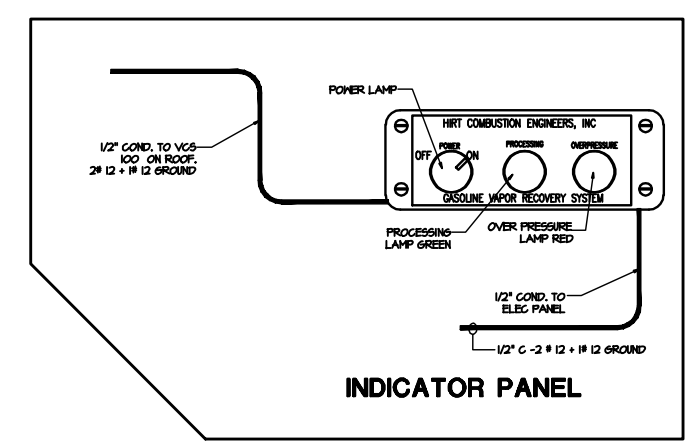

INDICATOR PANEL

REVISIONS	BY

DESIGN BUILD
EVR UPGRADE

APEC
AMERICAN PETROLEUM ENVIRONMENTAL CONSTRUCTION
WILLIAM H. ROSS CONTRACTORS LICENSE #341375
P.O. BOX 55105 STOCKTON, CA 95205
(209) 943-3000 FAX (209) 943-3003

LAMORINDA GAS & MOTOR SPORT
1410 MORAGA ROAD.
MORAGA, CA 94556

DATE:	12-09-09
SCALE:	AS SHOWN
DRAWN:	R. MENDEZ
JOB:	09-MORAGA-RD.

SHEET **C-1.1** OF SHEETS